Rexroth
Bosch Group

Rexroth EcoDrive Cs Drives

R911295758
Edition 02

Project Planning Manual

Courtesy of CMA/Flodyne/Hydradyne ▪ Motion Control ▪ Hydraulic ▪ Pneumatic ▪ Electrical ▪ Mechanical ▪ (800) 426-5480 ▪ www.cmafh.com

Courtesy of CMA/Flodyne/Hydradyne ▪ Motion Control ▪ Hydraulic ▪ Pneumatic ▪ Electrical ▪ Mechanical ▪ (800) 426-5480 ▪ www.cmafh.com

Title Rexroth EcoDrive Cs
Drives

Type of Documentation Project Planning Manual

Document Typecode DOK-ECODR3-DKC**.3-CS*-PR02-EN-P

Internal File Reference

- Document Number 120-1000-B344-02

Purpose of Documentation This documentation describes …

- planning the mechanical control cabinet construction
- planning the electrical control cabinet construction
- logistical handling of the equipment

Record of Revisions

Description	Release Date	Notes
DOK-ECODR3-DKC**.3-CS*-PR01-EN-P	03.2004	first edition
DOK-ECODR3-DKC**.3-CS*-PR02-EN-P	11.2004	second edition

Copyright © Bosch Rexroth AG 2004

Copying this document, giving it to others and the use or communication of the contents thereof without express authority, are forbidden. Offenders are liable for the payment of damages. All rights are reserved in the event of the grant of a patent or the registration of a utility model or design (DIN 34-1).

Validity The specified data only serve to describe the product. No statements concerning a certain condition or suitability for a certain application can be derived from our information. The given information does not release the user from the obligation of own judgement and verification. It must be remembered that our products are subject to a natural process of wear and aging.

Published by Bosch Rexroth AG
Bgm.-Dr.-Nebel-Str. 2 • D-97816 Lohr a. Main

Telephone +49 (0)93 52/40-0 • Tx 68 94 21 • Fax +49 (0)93 52/40-48 85

http://www.boschrexroth.de/

Dept. EDY/EDY1 (MW/US)

Note This document has been printed on chlorine-free bleached paper.

Courtesy of CMA/Flodyne/Hydradyne ▪ Motion Control ▪ Hydraulic ▪ Pneumatic ▪ Electrical ▪ Mechanical ▪ (800) 426-5480 ▪ www.cmafh.com

Contents

1 Introduction to the System 1-1

1.1 Rexroth EcoDrive Cs Drive System ... 1-1
1.2 Rexroth EcoDrive Cs Device Range ... 1-2
Individual Components ... 1-2
Configuration ... 1-2
1.3 Drive Controller – Motor Combinations ... 1-4
1.4 Type Codes ... 1-5
Drive Controllers with Analog/Parallel Interface ... 1-5
Drive Controllers with SERCOS interface ... 1-6
Drive Controllers without Master Communication (Basic Devices) ... 1-7
Master Communication ... 1-8

2 Important Directions for Use 2-1

2.1 Appropriate Use ... 2-1
Introduction ... 2-1
Areas of Use and Application ... 2-2
2.2 Inappropriate Use ... 2-2

3 Safety Instructions for Electric Drives and Controls 3-1

3.1 Introduction ... 3-1
3.2 Explanations ... 3-1
3.3 Hazards by Improper Use ... 3-2
3.4 General Information ... 3-3
3.5 Protection Against Contact with Electrical Parts ... 3-5
3.6 Protection Against Electric Shock by Protective Low Voltage (PELV) ... 3-6
3.7 Protection Against Dangerous Movements ... 3-7
3.8 Protection Against Magnetic and Electromagnetic Fields During Operation and Mounting ... 3-9
3.9 Protection Against Contact with Hot Parts ... 3-10
3.10 Protection During Handling and Mounting ... 3-10
3.11 Battery Safety ... 3-11
3.12 Protection Against Pressurized Systems ... 3-11

4 Technical Data (Drive Controllers) 4-1

4.1 Dimensional Drawings ... 4-1
DKC01.3-0xx Drive Controllers with Analog/Parallel Interface ... 4-1
DKC02.3-004 (100 W), DKC02.3-008 (200 W) and DKC02.3-012 (400 W) Drive Controllers with SERCOS interface ... 4-2
DKC02.3-018 (750 W) Drive Controller with SERCOS interface ... 4-3

Courtesy of CMA/Flodyne/Hydradyne ▪ Motion Control ▪ Hydraulic ▪ Pneumatic ▪ Electrical ▪ Mechanical ▪ (800) 426-5480 ▪ www.cmafh.com

DKC10.3-004 (100 W), DKC10.3-008 (200 W) and DKC10.3-012 (400 W) Drive Controllers – Basic Devices ... 4-4
DKC10.3-018 (750 W) Drive Controller – Basic Device ... 4-5
4.2 Mass and Materials ... 4-6
4.3 Ambient and Operating Conditions ... 4-7
4.4 Electrical Data ... 4-9
Power Section ... 4-9
Performance Data ... 4-11
Control Voltage Connection ... 4-15
4.5 Control and Display Elements (H1, S1, S2, S3) ... 4-16
H1 (Diagnostic Display) ... 4-16
S1 (Button) ... 4-16
S2, S3 (Address Switch) ... 4-16
4.6 CE Label, C-UL Listing, Tests ... 4-17

5 Electrical Connections 5-1
5.1 Connections Independent of the Device ... 5-1
Views of the Devices and Terminal Connector Designations ... 5-1
Schematic Overall Connection Diagram ... 5-3
X1, Mains and Control Voltage ... 5-5
X2, Additional Choke and Braking Resistor ... 5-6
X3, Motor ... 5-9
Ground Connection ... 5-11
X4, Encoder ... 5-12
X5_1: Digital Inputs ... 5-13
X5_2: Digital Outputs ... 5-15
X5_3: Holding Brake ... 5-18
X6, Serial Interface RS232 ... 5-21
5.2 Connections Dependent on the Device ... 5-23
DKC01.3 – Analog/Parallel Interface ... 5-23
DKC02.3 – SERCOS interface ... 5-31
DKC03.3 – Profibus-DP Interface ... 5-33
DKC06.3 – DeviceNet Interface with COMBICON Connector ... 5-39
DKC16.3 – DeviceNet Interface with Sealed Micro-Style Connector ... 5-41
DKC05.3 – CANopen Interface ... 5-43
5.3 Mounting a Master Communication Module ... 5-45
Removing the Shipping Brace ... 5-45
Inserting the Master Communication Module ... 5-46
5.4 Replacing a Master Communication Module ... 5-47

6 Mains and Supply Voltage Connection 6-1
6.1 Connection Features ... 6-2
6.2 Kinds of Connection ... 6-3
Single-Phase Connection ... 6-3
Three-Phase Connection ... 6-4
6.3 Inrush Current and Mains Phase Current ... 6-5
Characteristic of Inrush Current ... 6-5

Courtesy of CMA/Flodyne/Hydradyne ▪ Motion Control ▪ Hydraulic ▪ Pneumatic ▪ Electrical ▪ Mechanical ▪ (800) 426-5480 ▪ www.cmafh.com

Inrush Current Impulse 6-6
Computing Phase Current on the Mains 6-9
Mains Connection with Phase Currents of More than 25 A 6-11
Mains Connection with Phase Currents of Less than 25 A 6-12
6.4 Selecting Q1 Fuse and K1 Contactor 6-13
6.5 Mains Filter 6-14
6.6 Operation on 400/480 V Mains 6-15
Basics 6-15
Selecting the Mains Transformer 6-15
6.7 The Ground Conditions of the Power Supply Network 6-16
6.8 Earth-leakage Circuit Breaker 6-17
6.9 Control Circuits for the Mains Connection 6-17
Overview 6-17
Control Circuits with E-Stop 6-18

7 Designing the Control Cabinet 7-1

7.1 Notes on Control Cabinet Project Planning 7-1
Mounting Position and Distances 7-1
Arranging the Components in the Control Cabinet 7-3
7.2 Using Cooling Units in the Control Cabinet 7-4
7.3 General Information 7-6
7.4 Wire Routing in the Control Cabinet 7-7
7.5 EMC in the Control Cabinet 7-7

8 Motors 8-1

8.1 Overview 8-1
Basic Type 8-1
Options 8-1
Benefits 8-1
8.2 MSM Type Code 8-2
Motor MSM020B 8-2
Motor MSM030 8-3
Motor MSM040B 8-4
Types 8-5
8.3 Technical Data 8-6
Basics 8-6
Definition of Parameters 8-7
8.4 MSM020B 8-9
Dimensions 8-9
Key 8-10
Cables at the Motor 8-10
Technical Data 8-11
8.5 MSM030B 8-13
Dimensions 8-13
Key 8-14
Cables at the Motor 8-14

Technical Data ... 8-15
8.6 MSM030C ... 8-17
Dimensions ... 8-17
Key ... 8-18
Cables at the Motor ... 8-18
Technical Data ... 8-19
8.7 MSM040B ... 8-21
Dimensions ... 8-21
Key ... 8-22
Cables at the Motor ... 8-22
Technical Data ... 8-23
8.8 Application Instructions ... 8-25
Operating Conditions ... 8-25
Degree of protection ... 8-26
Design and Installation Positions ... 8-27
Housing Materials ... 8-28
Holding Brake ... 8-29
Output Shaft and Motor Bearing ... 8-30
Encoder ... 8-34
Acceptances, Approvals ... 8-39
8.9 Assembly ... 8-40
Skilled Technical Personnel ... 8-40
Mounting the Motor ... 8-40
Connecting the Motor ... 8-41
8.10 Startup, Operation, and Maintenance ... 8-42
Startup ... 8-42
Operation ... 8-43
Maintenance ... 8-43

9 Identifying the Components 9-1
9.1 Marking the Components ... 9-1
9.2 Type Plates ... 9-1
Type Plates at the Drive Controller ... 9-1
Type Plate at the Motor ... 9-3

10 Additional Components 10-1
10.1 Cables ... 10-1
Motor Cable IKG0331 ... 10-1
Motor Extension Cable IKG0332 ... 10-2
Encoder Cable IKS0230 ... 10-3
Encoder Extension Cable IKS0232 ... 10-4
Encoder Emulation Cable RKG0008 ... 10-5
RS232 Cable IKB0041 ... 10-6
10.2 Accessories ... 10-7
SUP-E01-DKC*CS-CONSIG ... 10-7
SUP-E02-DKC*CS-CONPWR ... 10-10

Courtesy of CMA/Flodyne/Hydradyne ▪ Motion Control ▪ Hydraulic ▪ Pneumatic ▪ Electrical ▪ Mechanical ▪ (800) 426-5480 ▪ www.cmafh.com

SUP-E03-DKC*CS-BATTRY 10-12
SUP-E04-DKC*CS-ENCODR (Encoder Adapter) 10-13
SUP-E05-DKC*CS-SURGEP 10-19
SUP-E06-DKC*CS-CONSIG 10-21
10.3 Braking Resistor 10-23
Notes 10-23
Identification 10-23
Mechanical Data 10-24
Electrical Data 10-25
10.4 DC24V NTM power supplies 10-26
Application recommendations 10-26
Technical data 10-26
Dimensional sheets and installation dimensions 10-27
Front views 10-27
Electrical connection 10-28
Type code 10-29
10.5 DST transformers 10-30
Selection 10-30
Autotransformers for Drive Controllers 10-30
Technical Data 10-31
Type Code 10-37
10.6 Mains Filter 10-38
NFE01.1 10-38
NFE02.1 10-39
NFD03.1 10-40

11 Service & Support 11-1

11.1 Helpdesk 11-1
11.2 Service-Hotline 11-1
11.3 Internet 11-1
11.4 Vor der Kontaktaufnahme... - Before contacting us... 11-1
11.5 Kundenbetreuungsstellen - Sales & Service Facilities 11-2

12 Index 12-1

Courtesy of CMA/Flodyne/Hydradyne ▪ Motion Control ▪ Hydraulic ▪ Pneumatic ▪ Electrical ▪ Mechanical ▪ (800) 426-5480 ▪ www.cmafh.com

Courtesy of CMA/Flodyne/Hydradyne ▪ Motion Control ▪ Hydraulic ▪ Pneumatic ▪ Electrical ▪ Mechanical ▪ (800) 426-5480 ▪ www.cmafh.com

Courtesy of CMA/Flodyne/Hydradyne ▪ Motion Control ▪ Hydraulic ▪ Pneumatic ▪ Electrical ▪ Mechanical ▪ (800) 426-5480 ▪ www.cmafh.com

1 Introduction to the System

1.1 Rexroth EcoDrive Cs Drive System

Rexroth EcoDrive Cs is a new generation of system-compatible AC servo drives in the lower power range of 100 to 750 W. The drive controllers and motors have a specifically compact design.

The drive controllers are equipped with the SERCOS interface, PROFIBUS-DP, DeviceNet or CANopen master communication modules; they are perfectly suited for use in systems with multiple-axis devices and can also be used as intelligent single axes on a standard field bus.

There are four motor sizes (100 W, 200 W, 400 W, 750 W) with minimum dimensions that are adapted to the drive controllers.

The following options are available for the motors:

- integrated holding brake
- drive shaft with key
- absolute encoder for detecting the current position of the load without travelling to reference point

Typical applications of Rexroth EcoDrive Cs are:

- handling systems
- packaging machines
- mounting systems
- printing machines
- machine tools

Rexroth
Bosch Group

Courtesy of CMA/Flodyne/Hydradyne ▪ Motion Control ▪ Hydraulic ▪ Pneumatic ▪ Electrical ▪ Mechanical ▪ (800) 426-5480 ▪ www.cmafh.com

1.2 Rexroth EcoDrive Cs Device Range

Individual Components

The following individual components are available for Rexroth EcoDrive Cs:

- motors
- basic devices
- master communication cards
- battery for the absolute encoder
- cables (motor, encoder, RS232)
- connection and mounting accessories
- external braking resistor
- mains transformer

Note: These individual components can be ordered individually.

Configuration

A drive controller with PROFIBUS-DP, DeviceNet or CANopen interface is characterized by the configuration of the basic device with the respective master communication card.

There are the following end devices:

End device	Basic device	Master communication card	Master communication
DKC01.3-0xx	-	none	analog/parallel
DKC02.3-0xx	-	none	SERCOS
DKC03.3-0xx	**DKC10.3**-0xx	ECM01.1-**PB01**	PROFIBUS-DP
DKC05.3-0xx	**DKC10.3**-0xx	ECM01.1-**CN01**	CANopen
DKC06.3-0xx	**DKC10.3**-0xx	ECM01.1-**DN01**	DeviceNet
DKC10.3-0xx	**DKC10.3**-0xx	ECM01.1-**NNNN**	digital I/Os
DKC16.3-0xx	**DKC10.3**-0xx	ECM01.1-**DN02**	DeviceNet with sealed micro-style connector

Fig. 1-1: Device configurations for Rexroth EcoDrive Cs

Note: Mounting a master communication card: see chapter 5.3.

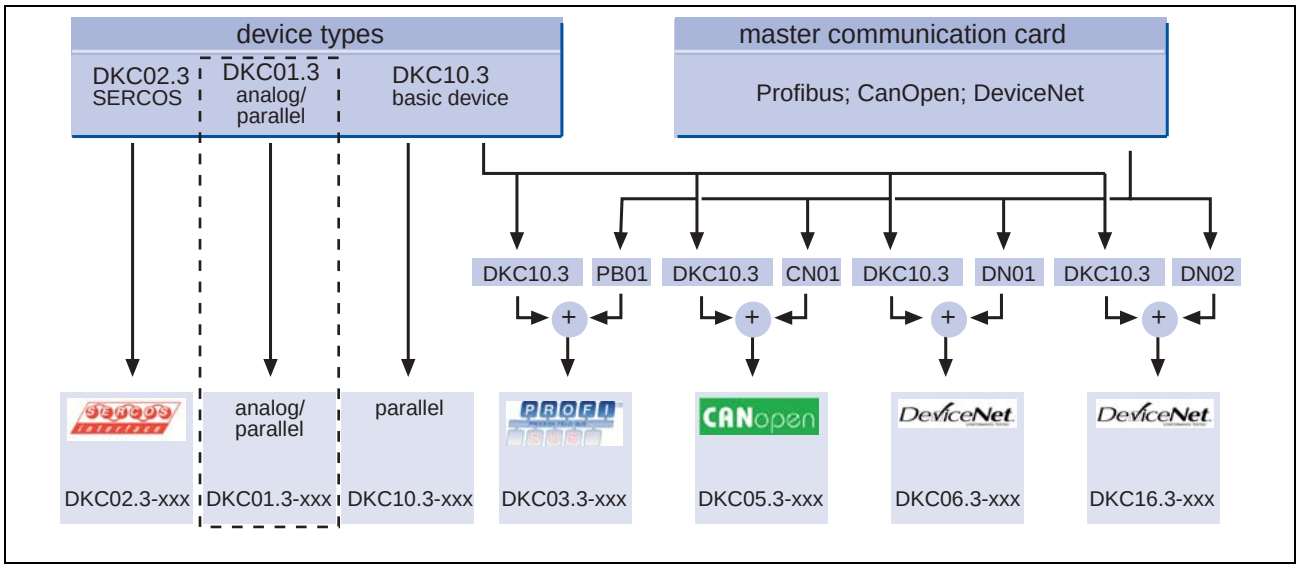

Fig. 1-2: Overview

Note: Given the respective configuration of the digital inputs/outputs, a basic device without master communication card can be used as a drive with parallel interface (7 inputs, 3 outputs).

Courtesy of CMA/Flodyne/Hydradyne ▪ Motion Control ▪ Hydraulic ▪ Pneumatic ▪ Electrical ▪ Mechanical ▪ (800) 426-5480 ▪ www.cmafh.com

Courtesy of CMA/Flodyne/Hydradyne ▪ Motion Control ▪ Hydraulic ▪ Pneumatic ▪ Electrical ▪ Mechanical ▪ (800) 426-5480 ▪ www.cmafh.com

1.3 Drive Controller – Motor Combinations

Note: The individual drive controllers may only be operated with the respective motors.

Drive controller	Motor	Properties (motor)
DKCxx.x-**004**	MSM**020B**-0300-NN-**C0-CG0**	**100 W**: incremental, plain shaft, without brake
	MSM**020B**-0300-NN-**C0-CG1**	**100 W**: incremental, plain shaft, with brake
	MSM**020B**-0300-NN-**C0-CC0**	**100 W**: incremental, key, without brake
	MSM**020B**-0300-NN-**C0-CC1**	**100 W**: incremental, key, with brake
	MSM**020B**-0300-NN-**M0-CG0**	**100 W**: absolute, plain shaft, without brake
	MSM**020B**-0300-NN-**M0-CG1**	**100 W**: absolute, plain shaft, with brake
	MSM**020B**-0300-NN-**M0-CC0**	**100 W**: absolute, key, without brake
	MSM**020B**-0300-NN-**M0-CC1**	**100 W**: absolute, key, with brake
DKCxx.x-**008**	MSM**030B**-0300-NN-**C0-CG0**	**200 W**: incremental, plain shaft, without brake
	MSM**030B**-0300-NN-**C0-CG1**	**200 W**: incremental, plain shaft, with brake
	MSM**030B**-0300-NN-**C0-CC0**	**200 W**: incremental, key, without brake
	MSM**030B**-0300-NN-**C0-CC1**	**200 W**: incremental, key, with brake
	MSM**030B**-0300-NN-**M0-CG0**	**200 W**: absolute, plain shaft, without brake
	MSM**030B**-0300-NN-**M0-CG1**	**200 W**: absolute, plain shaft, with brake
	MSM**030B**-0300-NN-**M0-CC0**	**200 W**: absolute, key, without brake
	MSM**030B**-0300-NN-**M0-CC1**	**200 W**: absolute, key, with brake
DKCxx.x-**012**	MSM**030C**-0300-NN-**C0-CG0**	**400 W**: incremental, plain shaft, without brake
	MSM**030C**-0300-NN-**C0-CG1**	**400 W**: incremental, plain shaft, with brake
	MSM**030C**-0300-NN-**C0-CC0**	**400 W**: incremental, key, without brake
	MSM**030C**-0300-NN-**C0-CC1**	**400 W**: incremental, key, with brake
	MSM**030C**-0300-NN-**M0-CG0**	**400 W**: absolute, plain shaft, without brake
	MSM**030C**-0300-NN-**M0-CG1**	**400 W**: absolute, plain shaft, with brake
	MSM**030C**-0300-NN-**M0-CC0**	**400 W**: absolute, key, without brake
	MSM**030C**-0300-NN-**M0-CC1**	**400 W**: absolute, key, with brake
DKCxx.x-**018**	MSM**040B**-0300-NN-**C0-CG0**	**750 W**: incremental, plain shaft, without brake
	MSM**040B**-0300-NN-**C0-CG1**	**750 W**: incremental, plain shaft, with brake
	MSM**040B**-0300-NN-**C0-CC0**	**750 W**: incremental, key, without brake
	MSM**040B**-0300-NN-**C0-CC1**	**750 W**: incremental, key, with brake
	MSM**040B**-0300-NN-**M0-CG0**	**750 W**: absolute, plain shaft, without brake
	MSM**040B**-0300-NN-**M0-CG1**	**750 W**: absolute, plain shaft, with brake
	MSM**040B**-0300-NN-**M0-CC0**	**750 W**: absolute, key, without brake
	MSM**040B**-0300-NN-**M0-CC1**	**750 W**: absolute, key, with brake

Fig. 1-3: Drive controller – motor combinations

Courtesy of CMA/Flodyne/Hydradyne ▪ Motion Control ▪ Hydraulic ▪ Pneumatic ▪ Electrical ▪ Mechanical ▪ (800) 426-5480 ▪ www.cmafh.com

1.4 Type Codes

Note: The following figures illustrate the basic structure of the type codes. Your sales representative will help you with the current status of available versions.

Drive Controllers with Analog/Parallel Interface

Abbrev. Column →	1	2	3	4	5	6	7	8	9	10	11	12	13	14	15	16	17	18	19	20	21	22	23	24	25	26	27	28	29	30	31	32	33	34	35	36	37	38	39	40
Example:	D	K	C	0	1	.	3	-	0	0	4	-	3	-	M	G	P	-	0	1	V	R	S																	

1. Product
1.1 DKC . . . . . = DKC

2. Line
2.1 1 . . . . . = 01

3. Design
3.1 3 . . . . . = 3

4. Rated current
4.1 4 A . . . . . = 004
4.2 8 A . . . . . = 008
4.3 12 A . . . . . = 012
4.4 18 A . . . . . = 018

5. DC-bus nominal voltage
5.1 DC 300 V . . . . . = 3

6. Firmware
6.1 Multi interface general purpose . . . . . = MGP

7. Firmware version
7.1 e.g., 01 . . . . . = 01

8. Nature of the firmware
8.1 Standard . . . . . = V

9. Firmware release status (update) (00 to 99)
9.1 Release status (the currently valid status
= status of the items list delivered) . . . . . = RS

Illustration example: DKC01.3-XXX-3

Fig. 1-4: Type code for drive controllers with analog/parallel interface

Rexroth Bosch Group

Drive Controllers with SERCOS interface

Abbrev. Column →	1	2	3	4	5	6	7	8	9	10	11	12	13	14	15	16	17	18	19	20	21	22	23	24	25	26	27	28	29	30	31	32	33	34	35	36	37	38	39	40
Example:	D	K	C	0	2	.	3	-	0	0	4	-	3	-	M	G	P	-	0	1	V	R	S																	

1. Product
1.1 DKC . . . . . = DKC

2. Line
2.1 2 . . . . . = 02

3. Design
3.1 3 . . . . . = 3

4. Rated current
4.1 4 A . . . . . = 004
4.2 8 A . . . . . = 008
4.3 12 A . . . . . = 012
4.4 18 A . . . . . = 018

5. DC-bus nominal voltage
5.1 DC 300 V . . . . . = 3

6. Firmware
6.1 Multi interface general purpose . . . . . = MGP

7. Firmware version
7.1 e.g., 01 . . . . . = 01

8. Nature of the firmware
8.1 Standard . . . . . = V

9. Firmware release status (update) (00 to 99)
9.1 Release status (the currently valid status
= status of the items list delivered) . . . . . = RS

Illustration example: DKC02.3-XXX-3

Fig. 1-5: Type code for drive controllers with SERCOS interface

Courtesy of CMA/Flodyne/Hydradyne ▪ Motion Control ▪ Hydraulic ▪ Pneumatic ▪ Electrical ▪ Mechanical ▪ (800) 426-5480 ▪ www.cmafh.com

Drive Controllers without Master Communication (Basic Devices)

Abbrev. Column	1	2	3	4	5	6	7	8	9	10	11	12	13	14	15	16	17	18	19	20	21	22	23	24	25	26	27	28	29	30	31	32	33	34	35	36	37	38	39	40
Example:	D	K	C	1	0	.	3	-	0	0	4	-	3	-	M	G	P	-	0	1	V	R	S																	

1. Product
1.1 DKC . . . . . = DKC

2. Line
2.1 10 . . . . . = 10

3. Design
3.1 3 . . . . . = 3

4. Rated current
4.1 4 A . . . . . = 004
4.2 8 A . . . . . = 008
4.3 12 A . . . . . = 012
4.4 18 A . . . . . = 018

5. DC-bus nominal voltage
5.1 DC 300 V . . . . . = 3

6. Firmware
6.1 Multi interface general purpose . . . . . = MGP

7. Firmware version
7.1 e.g., 01 . . . . . = 01

8. Nature of the firmware
8.1 Standard . . . . . = V

9. Firmware release status (update) (00 to 99)
9.1 Release status (the currently valid status
= status of the items list delivered) . . . . . = RS

Illustration example: DKC10.3-XXX-3

Fig. 1-6: Type code for drive controllers without master communication (basic devices)

Courtesy of CMA/Flodyne/Hydradyne ▪ Motion Control ▪ Hydraulic ▪ Pneumatic ▪ Electrical ▪ Mechanical ▪ (800) 426-5480 ▪ www.cmafh.com

Master Communication

Abbrev. Column →	1	2	3	4	5	6	7	8	9	10	11	12	13	14	15	16	17	18	19	20	21	22	23	24	25	26	27	28	29	30	31	32	33	34	35	36	37	38	39	40
Example:	E	C	M	0	1	.	1	-	P	B	0	1	-	N	N																									

1. Product
1.1 ECM . . . . . = ECM

2. Line
2.1 1 . . . . . = 01

3. Design
3.1 1 . . . . . = 1

4. Interface
4.1 CANopen. . . . . = CN01
4.2 DeviceNet (open style). . . . . = DN01
4.3 DeviceNet (micro style) . . . . . = DN02
4.4 none (cover) . . . . . = NNNN
4.5 PROFIBUS-DB. . . . . = PB01

5. Other design
5.1 none . . . . . = NN

Illustration example: ECM01.1

Fig. 1-7: Type code for master communication

Courtesy of CMA/Flodyne/Hydradyne ▪ Motion Control ▪ Hydraulic ▪ Pneumatic ▪ Electrical ▪ Mechanical ▪ (800) 426-5480 ▪ www.cmafh.com

Courtesy of CMA/Flodyne/Hydradyne ▪ Motion Control ▪ Hydraulic ▪ Pneumatic ▪ Electrical ▪ Mechanical ▪ (800) 426-5480 ▪ www.cmafh.com

2 Important Directions for Use

2.1 Appropriate Use

Introduction

Rexroth products represent state-of-the-art developments and manufacturing. They are tested prior to delivery to ensure operating safety and reliability.

The products may only be used in the manner that is defined as appropriate. If they are used in an inappropriate manner, then situations can develop that may lead to property damage or injury to personnel.

Note: Bosch Rexroth AG, as manufacturer, is not liable for any damages resulting from inappropriate use. In such cases, the guarantee and the right to payment of damages resulting from inappropriate use are forfeited. The user alone carries all responsibility of the risks.

Before using Rexroth products, make sure that all the pre-requisites for an appropriate use of the products are satisfied:

- Personnel that in any way, shape or form uses our products must first read and understand the relevant safety instructions and be familiar with appropriate use.
- If the product takes the form of hardware, then they must remain in their original state, in other words, no structural changes are permitted. It is not permitted to decompile software products or alter source codes.
- Do not mount damaged or faulty products or use them in operation.
- Make sure that the products have been installed in the manner described in the relevant documentation.

Courtesy of CMA/Flodyne/Hydradyne ▪ Motion Control ▪ Hydraulic ▪ Pneumatic ▪ Electrical ▪ Mechanical ▪ (800) 426-5480 ▪ www.cmafh.com

Areas of Use and Application

Drive controllers made by Rexroth are designed to control electrical motors and monitor their operation.

Control and monitoring of the motors may require additional sensors and actors.

Note: The drive controllers may only be used with the accessories and parts specified in this document. If a component has not been specifically named, then it may not be either mounted or connected. The same applies to cables and lines.

Operation is only permitted in the specified configurations and combinations of components using the software and firmware as specified in the relevant function descriptions.

Every drive controller has to be programmed before starting it up, making it possible for the motor to execute the specific functions of an application.

The drive controllers are designed for use in single or multiple-axis drive and control applications.

To ensure an application-specific use, the drive controllers are available with differing drive power and different interfaces.

Typical applications of drive controllers are:

- handling and mounting systems,
- packaging and foodstuff machines,
- printing and paper processing machines and
- machine tools.

The drive controllers may only be operated under the assembly, installation and ambient conditions as described here (temperature, system of protection, humidity, EMC requirements, etc.) and in the position specified.

2.2 Inappropriate Use

Using the drive controllers outside of the above-referenced areas of application or under operating conditions other than described in the document and the technical data specified is defined as “inappropriate use".

Drive controllers may not be used if

- they are subject to operating conditions that do not meet the above specified ambient conditions. This includes, for example, operation under water, in the case of extreme temperature fluctuations or extremely high maximum temperatures or if
- Bosch Rexroth has not specifically released them for that intended purpose. Please note the specifications outlined in the general safety instructions!

Courtesy of CMA/Flodyne/Hydradyne ▪ Motion Control ▪ Hydraulic ▪ Pneumatic ▪ Electrical ▪ Mechanical ▪ (800) 426-5480 ▪ www.cmafh.com

3 Safety Instructions for Electric Drives and Controls

3.1 Introduction

Read these instructions before the initial startup of the equipment in order to eliminate the risk of bodily harm or material damage. Follow these safety instructions at all times.

Do not attempt to install or start up this equipment without first reading all documentation provided with the product. Read and understand these safety instructions and all user documentation of the equipment prior to working with the equipment at any time. If you do not have the user documentation for your equipment, contact your local Rexroth representative to send this documentation immediately to the person or persons responsible for the safe operation of this equipment.

If the equipment is resold, rented or transferred or passed on to others, then these safety instructions must be delivered with the equipment.

WARNING

Improper use of this equipment, failure to follow the safety instructions in this document or tampering with the product, including disabling of safety devices, may result in material damage, bodily harm, electric shock or even death!

3.2 Explanations

The safety instructions describe the following degrees of hazard seriousness in compliance with ANSI Z535. The degree of hazard seriousness informs about the consequences resulting from non-compliance with the safety instructions.

Warning symbol with signal word	Degree of hazard seriousness according to ANSI
DANGER	Death or severe bodily harm will occur.
WARNING	Death or severe bodily harm may occur.
CAUTION	Bodily harm or material damage may occur.

Fig. 3-1: Hazard classification (according to ANSI Z535)

Rexroth Bosch Group

Courtesy of CMA/Flodyne/Hydradyne ▪ Motion Control ▪ Hydraulic ▪ Pneumatic ▪ Electrical ▪ Mechanical ▪ (800) 426-5480 ▪ www.cmafh.com

3.3 Hazards by Improper Use

DANGER	**High voltage and high discharge current! Danger to life or severe bodily harm by electric shock!**
DANGER	**Dangerous movements! Danger to life, severe bodily harm or material damage by unintentional motor movements!**
WARNING	**High electrical voltage due to wrong connections! Danger to life or bodily harm by electric shock!**
WARNING	**Health hazard for persons with heart pacemakers, metal implants and hearing aids in proximity to electrical equipment!**
CAUTION	**Surface of machine housing could be extremely hot! Danger of injury! Danger of burns!**
CAUTION	**Risk of injury due to improper handling! Bodily harm caused by crushing, shearing, cutting and mechanical shock or incorrect handling of pressurized systems!**
CAUTION	**Risk of injury due to incorrect handling of batteries!**

Courtesy of CMA/Flodyne/Hydradyne ▪ Motion Control ▪ Hydraulic ▪ Pneumatic ▪ Electrical ▪ Mechanical ▪ (800) 426-5480 ▪ www.cmafh.com

3.4 General Information

- Bosch Rexroth AG is not liable for damages resulting from failure to observe the warnings provided in this documentation.
- Read the operating, maintenance and safety instructions in your language before starting up the machine. If you find that you cannot completely understand the documentation for your product, please ask your supplier to clarify.
- Proper and correct transport, storage, assembly and installation as well as care in operation and maintenance are prerequisites for optimal and safe operation of this equipment.
- Only persons who are trained and qualified for the use and operation of the equipment may work on this equipment or within its proximity.
  - The persons are qualified if they have sufficient knowledge of the assembly, installation and operation of the equipment as well as an understanding of all warnings and precautionary measures noted in these instructions.
  - Furthermore, they must be trained, instructed and qualified to switch electrical circuits and equipment on and off in accordance with technical safety regulations, to ground them and to mark them according to the requirements of safe work practices. They must have adequate safety equipment and be trained in first aid.
- Only use spare parts and accessories approved by the manufacturer.
- Follow all safety regulations and requirements for the specific application as practiced in the country of use.
- The equipment is designed for installation in industrial machinery.
- The ambient conditions given in the product documentation must be observed.
- Use only safety features and applications that are clearly and explicitly approved in the Project Planning Manual.
  For example, the following areas of use are not permitted: construction cranes, elevators used for people or freight, devices and vehicles to transport people, medical applications, refinery plants, transport of hazardous goods, nuclear applications, applications sensitive to high frequency, mining, food processing, control of protection equipment (also in a machine).
- The information given in the documentation of the product with regard to the use of the delivered components contains only examples of applications and suggestions.
  The machine and installation manufacturer must
  - make sure that the delivered components are suited for his individual application and check the information given in this documentation with regard to the use of the components,
  - make sure that his application complies with the applicable safety regulations and standards and carry out the required measures, modifications and complements.
- Startup of the delivered components is only permitted once it is sure that the machine or installation in which they are installed complies with the national regulations, safety specifications and standards of the application.

Courtesy of CMA/Flodyne/Hydradyne ▪ Motion Control ▪ Hydraulic ▪ Pneumatic ▪ Electrical ▪ Mechanical ▪ (800) 426-5480 ▪ www.cmafh.com

- Operation is only permitted if the national EMC regulations for the application are met.
  The instructions for installation in accordance with EMC requirements can be found in the documentation "EMC in Drive and Control Systems".
  The machine or installation manufacturer is responsible for compliance with the limiting values as prescribed in the national regulations.
- Technical data, connections and operational conditions are specified in the product documentation and must be followed at all times.

Courtesy of CMA/Flodyne/Hydradyne ▪ Motion Control ▪ Hydraulic ▪ Pneumatic ▪ Electrical ▪ Mechanical ▪ (800) 426-5480 ▪ www.cmafh.com

3.5 Protection Against Contact with Electrical Parts

Note: This section refers to equipment and drive components with voltages above 50 Volts.

Touching live parts with voltages of 50 Volts and more with bare hands or conductive tools or touching ungrounded housings can be dangerous and cause electric shock. In order to operate electrical equipment, certain parts must unavoidably have dangerous voltages applied to them.

DANGER

High electrical voltage! Danger to life, severe bodily harm by electric shock!

⇒ Only those trained and qualified to work with or on electrical equipment are permitted to operate, maintain or repair this equipment.

⇒ Follow general construction and safety regulations when working on high voltage installations.

⇒ Before switching on power the ground wire must be permanently connected to all electrical units according to the connection diagram.

⇒ Do not operate electrical equipment at any time, even for brief measurements or tests, if the ground wire is not permanently connected to the points of the components provided for this purpose.

⇒ Before working with electrical parts with voltage higher than 50 V, the equipment must be disconnected from the mains voltage or power supply. Make sure the equipment cannot be switched on again unintended.

⇒ The following should be observed with electrical drive and filter components:

⇒ Wait five (5) minutes after switching off power to allow capacitors to discharge before beginning to work. Measure the voltage on the capacitors before beginning to work to make sure that the equipment is safe to touch.

⇒ Never touch the electrical connection points of a component while power is turned on.

⇒ Install the covers and guards provided with the equipment properly before switching the equipment on. Prevent contact with live parts at any time.

⇒ A residual-current-operated protective device (RCD) must not be used on electric drives! Indirect contact must be prevented by other means, for example, by an overcurrent protective device.

⇒ Electrical components with exposed live parts and uncovered high voltage terminals must be installed in a protective housing, for example, in a control cabinet.

Courtesy of CMA/Flodyne/Hydradyne ▪ Motion Control ▪ Hydraulic ▪ Pneumatic ▪ Electrical ▪ Mechanical ▪ (800) 426-5480 ▪ www.cmafh.com

To be observed with electrical drive and filter components:

DANGER

High electrical voltage on the housing!
High leakage current! Danger to life, danger of injury by electric shock!

⇒ Connect the electrical equipment, the housings of all electrical units and motors permanently with the safety conductor at the ground points before power is switched on. Look at the connection diagram. This is even necessary for brief tests.

⇒ Connect the safety conductor of the electrical equipment always permanently and firmly to the supply mains. Leakage current exceeds 3.5 mA in normal operation.

⇒ Use a copper conductor with at least 10 mm² cross section over its entire course for this safety conductor connection!

⇒ Prior to startups, even for brief tests, always connect the protective conductor or connect with ground wire. Otherwise, high voltages can occur on the housing that lead to electric shock.

3.6 Protection Against Electric Shock by Protective Low Voltage (PELV)

All connections and terminals with voltages between 0 and 50 Volts on Rexroth products are protective low voltages designed in accordance with international standards on electrical safety.

WARNING

High electrical voltage due to wrong connections! Danger to life, bodily harm by electric shock!

⇒ Only connect equipment, electrical components and cables of the protective low voltage type (PELV = Protective Extra Low Voltage) to all terminals and clamps with voltages of 0 to 50 Volts.

⇒ Only electrical circuits may be connected which are safely isolated against high voltage circuits. Safe isolation is achieved, for example, with an isolating transformer, an opto-electronic coupler or when battery-operated.

Courtesy of CMA/Flodyne/Hydradyne ▪ Motion Control ▪ Hydraulic ▪ Pneumatic ▪ Electrical ▪ Mechanical ▪ (800) 426-5480 ▪ www.cmafh.com

3.7 Protection Against Dangerous Movements

Dangerous movements can be caused by faulty control of the connected motors. Some common examples are:

- improper or wrong wiring of cable connections
- incorrect operation of the equipment components
- wrong input of parameters before operation
- malfunction of sensors, encoders and monitoring devices
- defective components
- software or firmware errors

Dangerous movements can occur immediately after equipment is switched on or even after an unspecified time of trouble-free operation.

The monitoring in the drive components will normally be sufficient to avoid faulty operation in the connected drives. Regarding personal safety, especially the danger of bodily injury and material damage, this alone cannot be relied upon to ensure complete safety. Until the integrated monitoring functions become effective, it must be assumed in any case that faulty drive movements will occur. The extent of faulty drive movements depends upon the type of control and the state of operation.

Courtesy of CMA/Flodyne/Hydradyne ▪ Motion Control ▪ Hydraulic ▪ Pneumatic ▪ Electrical ▪ Mechanical ▪ (800) 426-5480 ▪ www.cmafh.com

DANGER

Dangerous movements! Danger to life, risk of injury, severe bodily harm or material damage!

⇒ Ensure personal safety by means of qualified and tested higher-level monitoring devices or measures integrated in the installation. Unintended machine motion is possible if monitoring devices are disabled, bypassed or not activated.

⇒ Pay attention to unintended machine motion or other malfunction in any mode of operation.

⇒ Keep free and clear of the machine's range of motion and moving parts. Possible measures to prevent people from accidentally entering the machine's range of motion:

- use safety fences
- use safety guards
- use protective coverings
- install light curtains or light barriers

⇒ Fences and coverings must be strong enough to resist maximum possible momentum, especially if there is a possibility of loose parts flying off.

⇒ Mount the emergency stop switch in the immediate reach of the operator. Verify that the emergency stop works before startup. Don't operate the machine if the emergency stop is not working.

⇒ Isolate the drive power connection by means of an emergency stop circuit or use a starting lockout to prevent unintentional start.

⇒ Make sure that the drives are brought to a safe standstill before accessing or entering the danger zone. Safe standstill can be achieved by switching off the power supply contactor or by safe mechanical locking of moving parts.

⇒ Secure vertical axes against falling or dropping after switching off the motor power by, for example:

- mechanically securing the vertical axes
- adding an external braking/ arrester/ clamping mechanism
- ensuring sufficient equilibration of the vertical axes

The standard equipment motor brake or an external brake controlled directly by the drive controller are not sufficient to guarantee personal safety!

Courtesy of CMA/Flodyne/Hydradyne ▪ Motion Control ▪ Hydraulic ▪ Pneumatic ▪ Electrical ▪ Mechanical ▪ (800) 426-5480 ▪ www.cmafh.com

⇒ Disconnect electrical power to the equipment using a master switch and secure the switch against reconnection for:
- maintenance and repair work
- cleaning of equipment
- long periods of discontinued equipment use

⇒ Prevent the operation of high-frequency, remote control and radio equipment near electronics circuits and supply leads. If the use of such equipment cannot be avoided, verify the system and the installation for possible malfunctions in all possible positions of normal use before initial startup. If necessary, perform a special electromagnetic compatibility (EMC) test on the installation.

3.8 Protection Against Magnetic and Electromagnetic Fields During Operation and Mounting

Magnetic and electromagnetic fields generated near current-carrying conductors and permanent magnets in motors represent a serious health hazard to persons with heart pacemakers, metal implants and hearing aids.

WARNING

Health hazard for persons with heart pacemakers, metal implants and hearing aids in proximity to electrical equipment!

⇒ Persons with heart pacemakers, hearing aids and metal implants are not permitted to enter the following areas:
- Areas in which electrical equipment and parts are mounted, being operated or started up.
- Areas in which parts of motors with permanent magnets are being stored, operated, repaired or mounted.

⇒ If it is necessary for a person with a heart pacemaker to enter such an area, then a doctor must be consulted prior to doing so. Heart pacemakers that are already implanted or will be implanted in the future, have a considerable variation in their electrical noise immunity. Therefore there are no rules with general validity.

⇒ Persons with hearing aids, metal implants or metal pieces must consult a doctor before they enter the areas described above. Otherwise, health hazards will occur.

Courtesy of CMA/Flodyne/Hydradyne ▪ Motion Control ▪ Hydraulic ▪ Pneumatic ▪ Electrical ▪ Mechanical ▪ (800) 426-5480 ▪ www.cmafh.com

3.9 Protection Against Contact with Hot Parts

CAUTION

Housing surfaces could be extremely hot! Danger of injury! Danger of burns!

⇒ Do not touch housing surfaces near sources of heat! Danger of burns!

⇒ After switching the equipment off, wait at least ten (10) minutes to allow it to cool down before touching it.

⇒ Do not touch hot parts of the equipment, such as housings with integrated heat sinks and resistors. Danger of burns!

3.10 Protection During Handling and Mounting

Under certain conditions, incorrect handling and mounting of parts and components may cause injuries.

CAUTION

Risk of injury by incorrect handling! Bodily harm caused by crushing, shearing, cutting and mechanical shock!

⇒ Observe general installation and safety instructions with regard to handling and mounting.

⇒ Use appropriate mounting and transport equipment.

⇒ Take precautions to avoid pinching and crushing.

⇒ Use only appropriate tools. If specified by the product documentation, special tools must be used.

⇒ Use lifting devices and tools correctly and safely.

⇒ For safe protection wear appropriate protective clothing, e.g. safety glasses, safety shoes and safety gloves.

⇒ Never stand under suspended loads.

⇒ Clean up liquids from the floor immediately to prevent slipping.

Courtesy of CMA/Flodyne/Hydradyne ▪ Motion Control ▪ Hydraulic ▪ Pneumatic ▪ Electrical ▪ Mechanical ▪ (800) 426-5480 ▪ www.cmafh.com

3.11 Battery Safety

Batteries contain reactive chemicals in a solid housing. Inappropriate handling may result in injuries or material damage.

CAUTION

Risk of injury by incorrect handling!

⇒ Do not attempt to reactivate discharged batteries by heating or other methods (danger of explosion and cauterization).

⇒ Never charge non-chargeable batteries (danger of leakage and explosion).

⇒ Never throw batteries into a fire.

⇒ Do not dismantle batteries.

⇒ Do not damage electrical components installed in the equipment.

Note: Be aware of environmental protection and disposal! The batteries contained in the product should be considered as hazardous material for land, air and sea transport in the sense of the legal requirements (danger of explosion). Dispose batteries separately from other waste. Observe the legal requirements in the country of installation.

3.12 Protection Against Pressurized Systems

Certain motors and drive controllers, corresponding to the information in the respective Project Planning Manual, must be provided with pressurized media, such as compressed air, hydraulic oil, cooling fluid and cooling lubricant supplied by external systems. Incorrect handling of the supply and connections of pressurized systems can lead to injuries or accidents. In these cases, improper handling of external supply systems, supply lines or connections can cause injuries or material damage.

CAUTION

Danger of injury by incorrect handling of pressurized systems!

⇒ Do not attempt to disassemble, to open or to cut a pressurized system (danger of explosion).

⇒ Observe the operation instructions of the respective manufacturer.

⇒ Before disassembling pressurized systems, release pressure and drain off the fluid or gas.

⇒ Use suitable protective clothing (for example safety glasses, safety shoes and safety gloves)

⇒ Remove any fluid that has leaked out onto the floor immediately.

Note: Environmental protection and disposal! The media used in the operation of the pressurized system equipment may not be environmentally compatible. Media that are damaging the environment must be disposed separately from normal waste. Observe the legal requirements in the country of installation.

Courtesy of CMA/Flodyne/Hydradyne ▪ Motion Control ▪ Hydraulic ▪ Pneumatic ▪ Electrical ▪ Mechanical ▪ (800) 426-5480 ▪ www.cmafh.com

Notes

Courtesy of CMA/Flodyne/Hydradyne ▪ Motion Control ▪ Hydraulic ▪ Pneumatic ▪ Electrical ▪ Mechanical ▪ (800) 426-5480 ▪ www.cmafh.com

4 Technical Data (Drive Controllers)

Note:	Technical data of motors: see chapter 8

4.1 Dimensional Drawings

DKC01.3-0xx Drive Controllers with Analog/Parallel Interface

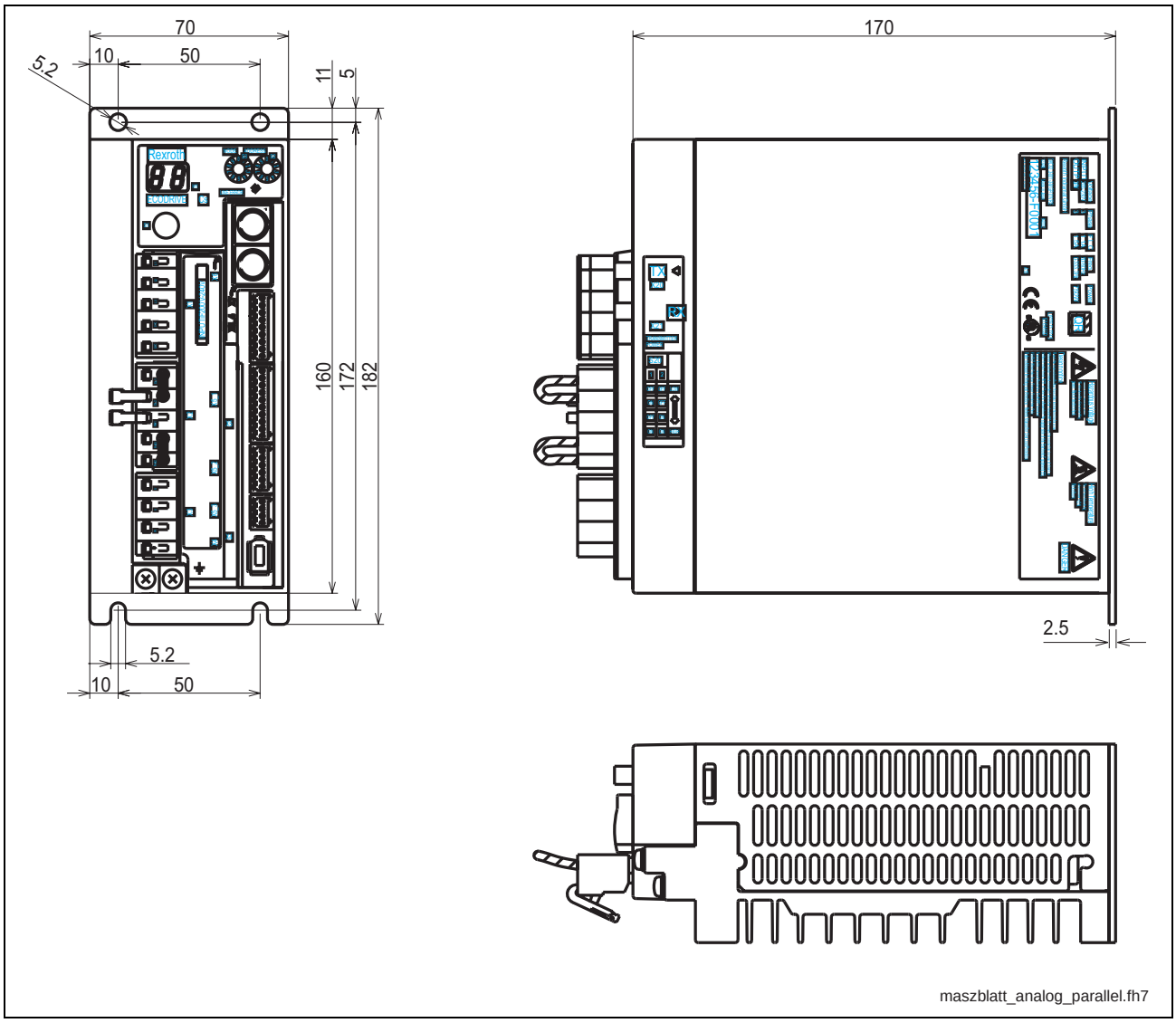

Fig. 4-1: DKC01.3-0xx Drive Controllers with Analog/Parallel Interface

DKC02.3-004 (100 W), DKC02.3-008 (200 W) and DKC02.3-012 (400 W) Drive Controllers with SERCOS interface

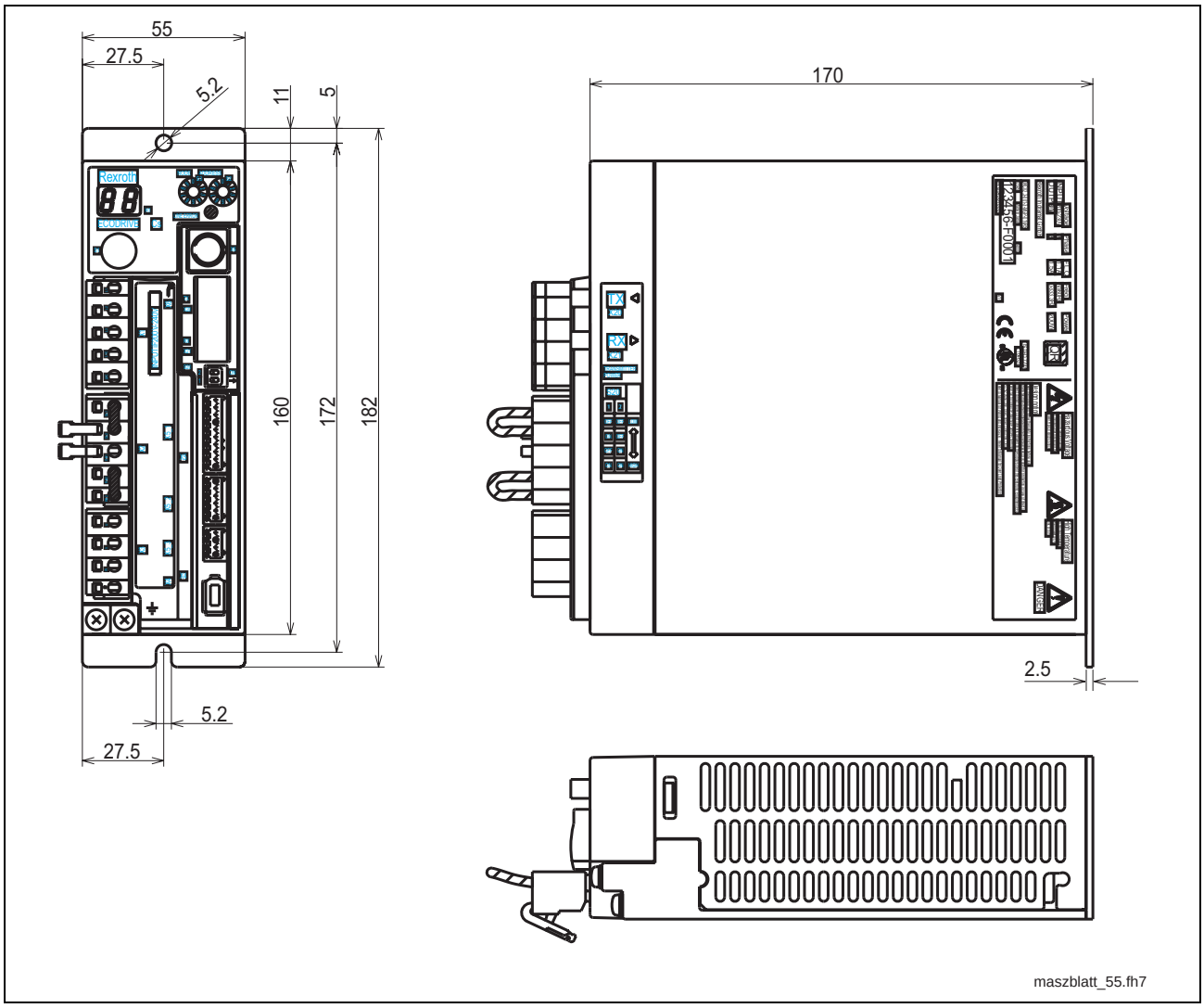

Fig. 4-2: DKC02.3-004 (100 W), DKC02.3-008 (200 W) and DKC02.3-012 (400 W) drive controllers with SERCOS interface

Courtesy of CMA/Flodyne/Hydradyne ▪ Motion Control ▪ Hydraulic ▪ Pneumatic ▪ Electrical ▪ Mechanical ▪ (800) 426-5480 ▪ www.cmafh.com

Courtesy of CMA/Flodyne/Hydradyne ▪ Motion Control ▪ Hydraulic ▪ Pneumatic ▪ Electrical ▪ Mechanical ▪ (800) 426-5480 ▪ www.cmafh.com

DKC02.3-018 (750 W) Drive Controller with SERCOS interface

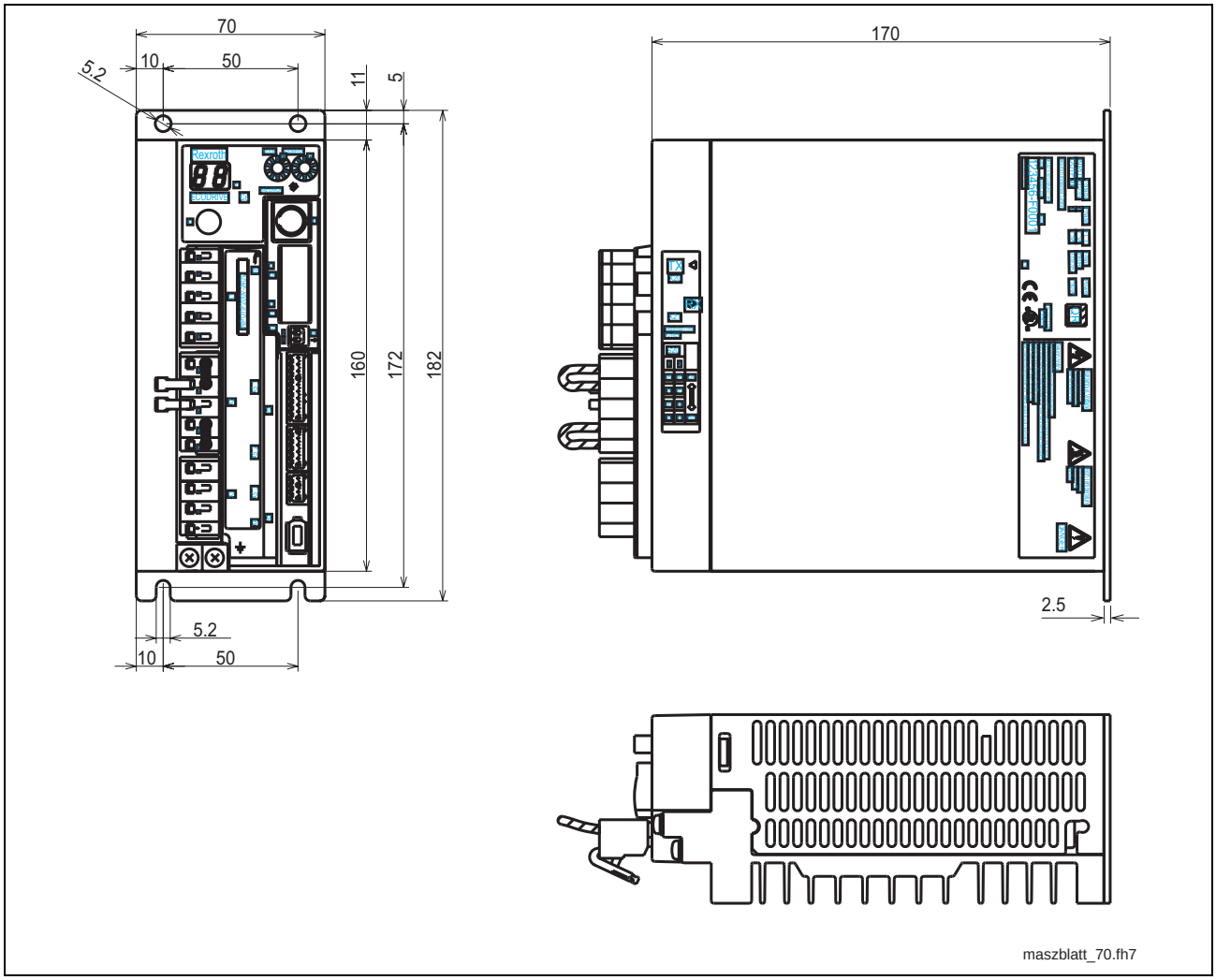

Fig. 4-3: DKC02.3-018 (750 W) drive controller with SERCOS interface

DKC10.3-004 (100 W), DKC10.3-008 (200 W) and DKC10.3-012 (400 W) Drive Controllers – Basic Devices

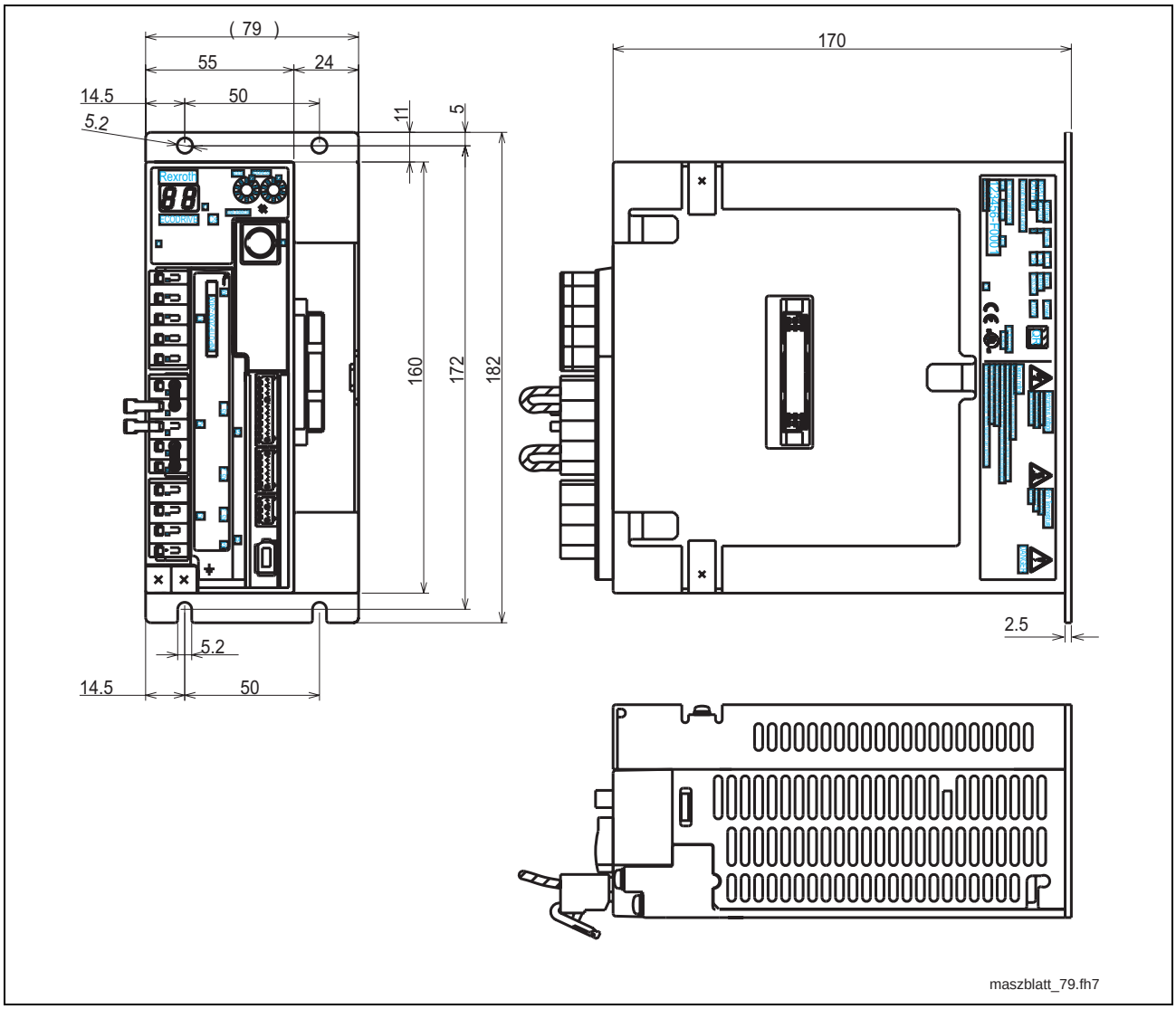

Fig. 4-4: DKC10.3-004 (100 W), DKC10.3-008 (200 W) and DKC10.3-012 (400 W) drive controllers – basic devices

Courtesy of CMA/Flodyne/Hydradyne ▪ Motion Control ▪ Hydraulic ▪ Pneumatic ▪ Electrical ▪ Mechanical ▪ (800) 426-5480 ▪ www.cmafh.com

DKC10.3-018 (750 W) Drive Controller – Basic Device

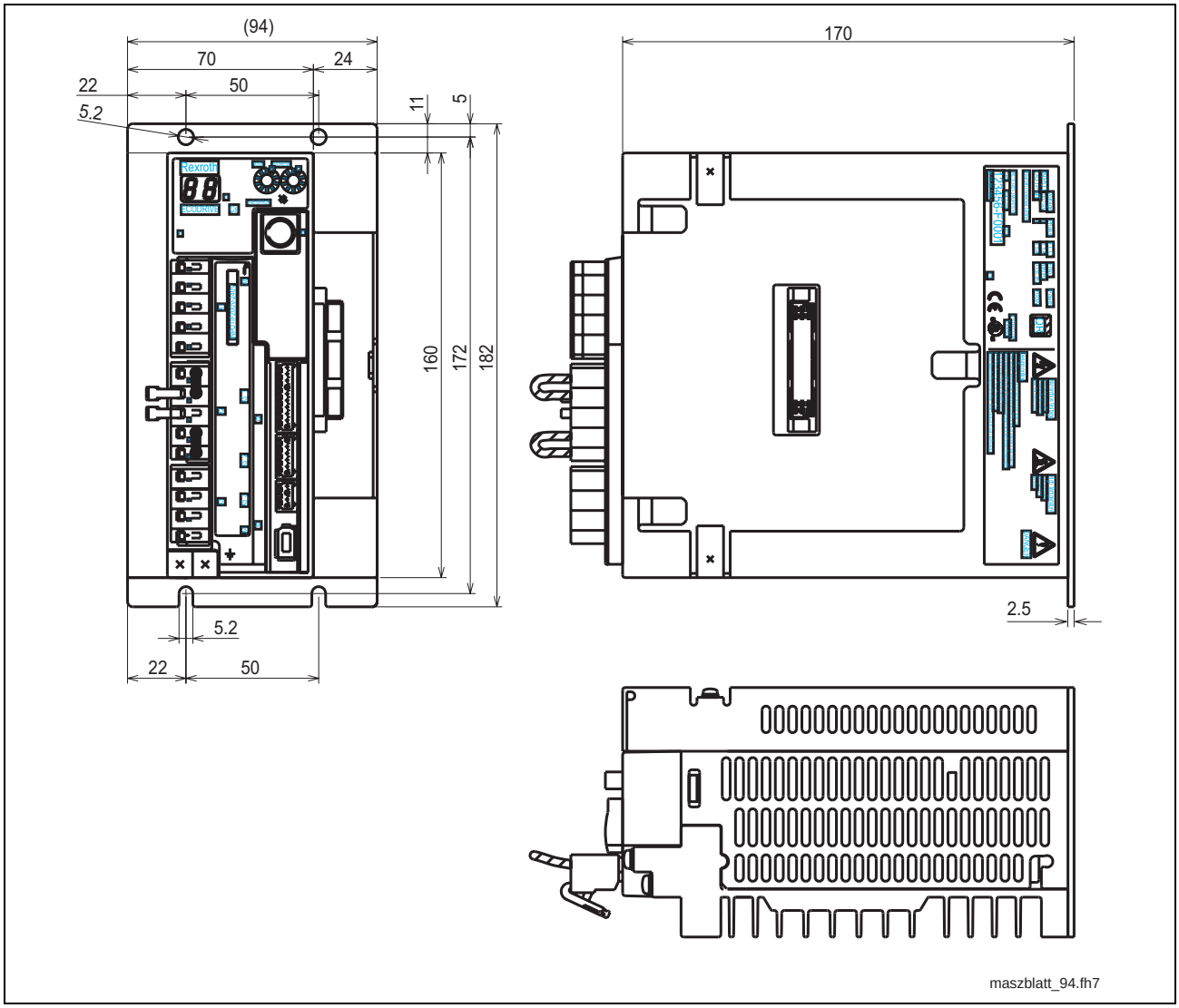

Fig. 4-5: DKC10.3-018 (750 W) drive controller – basic device

Courtesy of CMA/Flodyne/Hydradyne ▪ Motion Control ▪ Hydraulic ▪ Pneumatic ▪ Electrical ▪ Mechanical ▪ (800) 426-5480 ▪ www.cmafh.com

Courtesy of CMA/Flodyne/Hydradyne ▪ Motion Control ▪ Hydraulic ▪ Pneumatic ▪ Electrical ▪ Mechanical ▪ (800) 426-5480 ▪ www.cmafh.com

4.2 Mass and Materials

Designation	Symbol	Unit	DKC**.3-004	DKC**.3-008	DKC**.3-012	DKC**.3-018
mass SERCOS Analog/ Parallel	m	kg	1.4	1.4	1.4	1.7
PROFIBUS DeviceNet CANopen			1.8	1.8	1.8	2.1
materials used	-	-	free of asbestos and silicone			

Fig. 4-6: Mass and materials

Courtesy of CMA/Flodyne/Hydradyne ▪ Motion Control ▪ Hydraulic ▪ Pneumatic ▪ Electrical ▪ Mechanical ▪ (800) 426-5480 ▪ www.cmafh.com

4.3 Ambient and Operating Conditions

Note: The drive controllers and their additional components are designed for control cabinet mounting!

Designation	Symbol	Unit	Value
allowed ambient and air inlet temperature for rated data	T_A	°C	+0 ... +40
maximum allowed ambient and air inlet temperature with derating	T_A	°C	+55
storage and transport temperature	T_L	°C	-20 ... +80
max. allowed installation altitude for rated data		m	1000
max. allowed installation altitude	-	m	2000 (max. allowed ambient temperature then is 40 °C instead of 55 °C)
max. allowed relative humidity	-	%	90 free of moisture condensation
allowed degree of contamination	2, according to EN 50178 fine dusts not allowed, no moisture condensation		
degree of protection	IP20, according to EN 60529 = DIN VDE 0470-1-1992 (IEC 529-1989)		
Vibration sinus in operation according to EN 60068-2-6:			
Amplitude and frequency:	0.15 mm (peak-peak) at 10 ... 57 Hz		
Acceleration and frequency:	1 g at 57 ... 150 Hz		
Tolerance:	±15 %		
Vibration distortion (Random) in operation according to IEC 68-2-36:			
Frequency:	20 ... 150 Hz		
Spectral acceleration density amplitude:	0.005 g^2/Hz		
Tolerance:	± 3 dB		
Virtual value (r.m.s.) of the total acceleration:	1.0 g		

Fig. 4-7: Ambient and operating conditions

Note: The user must check that the ambient conditions, in particular the control cabinet temperature, are complied with by calculating the heat levels in the control cabinet.

Compatibility with foreign matters

All Rexroth controls and drives are developed and tested according to the state-of-the-art of technology.

As it is impossible to follow the continuing development of all materials (e.g. lubricants in machine tools) which may interact with our controls and drives, it cannot be completely ruled out that any reactions with the materials used by Bosch Rexroth might occur.

For this reason, before using the respective material a compatibility test has to be carried out for new lubricants, cleaning agents etc. and our housings/our housing materials.

Courtesy of CMA/Flodyne/Hydradyne ▪ Motion Control ▪ Hydraulic ▪ Pneumatic ▪ Electrical ▪ Mechanical ▪ (800) 426-5480 ▪ www.cmafh.com

Courtesy of CMA/Flodyne/Hydradyne ▪ Motion Control ▪ Hydraulic ▪ Pneumatic ▪ Electrical ▪ Mechanical ▪ (800) 426-5480 ▪ www.cmafh.com

4.4 Electrical Data

Power Section

Designation	Symbol	Unit	DKC**.3	
operating mode on the mains			single-phase*	three-phase
mains input voltage	U_{LN}	V	1 x AC	3 x AC
			200 - 240 +10%, -15%	
mains frequency	f_{LN}	Hz	50/60	
connected load	S_{LN}	kVA	**-004**: 0.4 **-008**: 0.7 **-012**: 1.4 **-018**: 2.1	**-004**: 0.4 **-008**: 0.7 **-012**: 1.4 **-018**: 2.4
nominal inrush current** (depending on mains input voltage)	$I_{L,cont}$	A	$I_{EIN1} = U_{LN.max}*1,414/R_{DC(Start)}$; see chapter 6.3 Inrush Current and Mains Phase Current	
nominal continuous input current** (depending on mains input voltage and supply)	$I_{L,max}$ (On)	A	**-004**: 1.1 **-008**: 1.3 **-012**: 2.2 **-018**: 5.3	**-004**: 0.7 **-008**: 1.1 **-012**: 1.8 **-018**: 4.0
soft-start resistor	$R_{DC(Start)}$	Ohm	4.7	
continuous power soft-start resistor	$P_{DC(Start)}$	W	17	
switching frequency (selectable)	f_S	kHz	4 and 8	
continuous output current **	$I_{out_eff\ cont2}$	A	**-004**: 1.0 **-008**: 1.6 **-012**: 2.5 **-018**: 3.4	**-004**: 1.0 **-008**: 1.6 **-012**: 2.5 **-018**: 4.3
characteristic curve output current			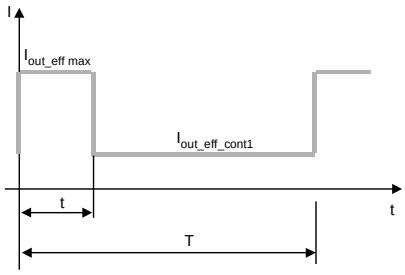	
maximum output current**, t=400ms; $I_{out_eff_cont1}$=0A	$I_{out_eff\ max}$	A	**-004**: 3.0 **-008**: 4.8 **-012**: 7.5 **-018**: 10.3	**-004**: 3.0 **-008**: 4.8 **-012**: 7.5 **-018**: 12.9
base load current at maximum current**; t=400ms; T=4s	$I_{out_eff\ cont1}$ ($I_{out_eff\ max}$)	A	**-004**: 0.4 **-008**: 0.5 **-012**: 0.9 **-018**: 1.1	**-004**: 0.4 **-008**: 0.5 **-012**: 0.9 **-018**: 1.4
output frequency range	f_{out}	Hz	**-004 ... -012**: 0 ... 333.3 **-018**: 0 ... 300	
power dissipation of the device (without internal continuous braking resistor power at 8 kHz)	$P_{VDiss,Drive}$	W	**-004**: 24.7 **-008**: 31.3	
power dissipation of the device (without internal continuous braking resistor power at 4 kHz)	$P_{Diss,Drive}$	W	**-012**: 34.5 **-018**: 41.9	

Courtesy of CMA/Flodyne/Hydradyne ▪ Motion Control ▪ Hydraulic ▪ Pneumatic ▪ Electrical ▪ Mechanical ▪ (800) 426-5480 ▪ www.cmafh.com

Designation	Symbol	Unit	DKC**.3
motor power dissipation	$P_{Diss,Motor}$	W	**-004**: 39.8 **-008**: 52.2 **-012**: 48.9 **-018**: 42.6
braking resistor peak power at U_{DC} = 240 V (allowed load cycle)	P_{BS}	kW	**-004 ... -018**: 1.68 (0.2 seconds ON, 67 seconds OFF)
max. regenerative power	$W_{R,MAX}$	Ws	**-004**: 12.0 **-008 ... -018**: 15.5
max. DC bus charging energy	W_{MAX}	kWs	**-004**: 0.04 **-008 ... -018**: 0.06
storable energy of the DC bus capacitors	W_{DC}	Ws	**-004**: 7.5 **-008 ... -018**: 10.5
nominal DC bus capacity	C_{DC}	mF	**-004**: 0.54 **-008 ... -018**: 0.81
DC bus voltage (depending on mains input voltage)	U_{DC}	V	152 - 420
continuous DC bus power (at 3 x AC 220 V, at Ta ≤ 40 °C)	P_{DC}	W	**-004**: 140 **-008**: 253 **-012**: 457 **-018**: 796
DC bus peak power	P_{DCpeak}	W	**-004**: 500 **-008**: 864 **-012**: 1469 **-018**: 2474
internal braking resistor (bleeder):			
resistance		Ohm	100
continuous bleeder power		W	17
energy absorption		Ws	400

* in the case of a 750 W device (DKC**.3-0018) a single-phase connection causes a shorter service life and derating

** the indicated values are rms values ($I_{eff} = I/\sqrt{2}$); the values are identical for all switching frequencies

Fig. 4-8: Technical data of mains connection and power section

Courtesy of CMA/Flodyne/Hydradyne ▪ Motion Control ▪ Hydraulic ▪ Pneumatic ▪ Electrical ▪ Mechanical ▪ (800) 426-5480 ▪ www.cmafh.com

Performance Data

Power Balance (Controller and Motor)

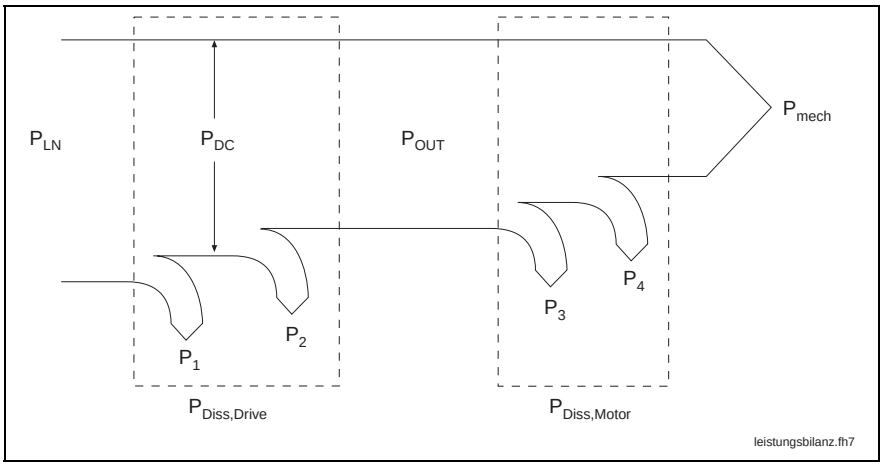

P_{LN}: input power
P_{DC}: DC bus power
P_{OUT}: output power of drive controller
P_{mech}: power at the driven shaft of the motor
$P_{Diss,Drive}$: power dissipation of drive controller
P_1: rectifier losses
P_2: IGBT losses
$P_{Diss,Motor}$: power dissipation of motor
P_3: brake losses
P_4: motor losses

Fig. 4-9: Power balance (controller and motor)

The following performance data apply under the following **conditions**:

- ambient temperature: 40 °C
- installation altitude: 1000 m
- The braking resistor installed in the drive controller is not active (because an external braking resistor is used, for example).

Device type	P_{LN}	P_{DC}	P_{Diss}	P_{mech}	η
DKCxx.3-0004	165	140.3	64.5	100.5	60.9
DKCxx.3-0008	284.5	253.2	83.5	201	70.6
DKCxx.3-0012	491.6	457.1	83.4	408.2	83
DKCxx.3-0018	838.1	796.2	84.5	753.6	89.9

P_{LN}: input power
P_{DC}: DC bus power
P_{Diss}: power dissipation of drive controller and motor
P_{mech}: power at the driven shaft of the motor
η: efficiency

Fig. 4-10: Performance data under rated conditions

Courtesy of CMA/Flodyne/Hydradyne ▪ Motion Control ▪ Hydraulic ▪ Pneumatic ▪ Electrical ▪ Mechanical ▪ (800) 426-5480 ▪ www.cmafh.com

Derating

Dimensioning

The power data apply to motors and drive controller within the specified ambient and operating conditions (see "Fig. 4-7: Ambient and operating conditions").

Differing conditions reduce the performance data

- of the drive controller:
  - allowed continuous DC bus power
  - continuous braking resistor power
  - continuous current
- of the motor:
  - power
  - continuous torque at standstill
  - S1 continuous torques
  - short-time service torque M_{KB}

according to the following diagrams.

Note: If deviating ambient temperatures and higher installation altitudes occur simultaneously, both utilization factors must be multiplied. The installation altitude must only be taken into account once, deviating ambient temperatures must be taken into account separately for motor and drive controller.

Operation at Installation Altitudes > 1000 m

According to restrictions of the conditions, the following derating applies:

Note: In the following it is understood that the other conditions (max. ambient temperature, no internal braking power, three-phase operation) are kept!

The maximum allowed installation altitude is 2000 m. Operation at an installation altitude of more than 1000 m causes derating due to reduced atmospheric pressure.

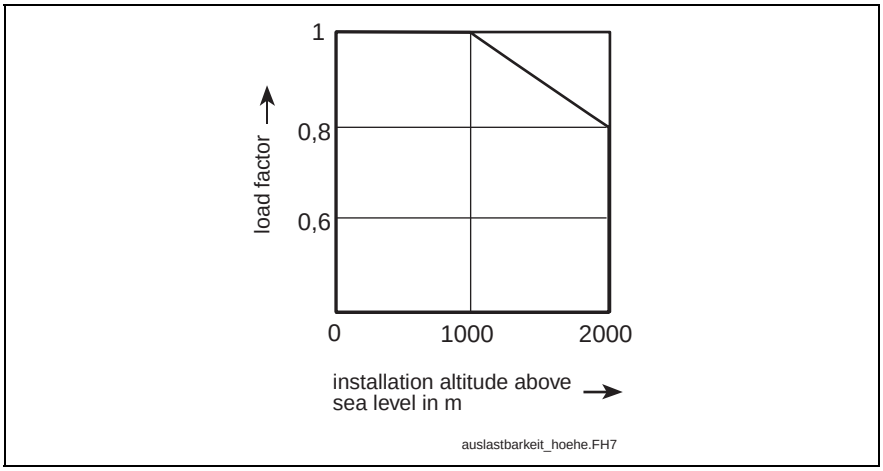

Fig. 4-11: Derating at installation altitudes > 1000 m

Courtesy of CMA/Flodyne/Hydradyne ▪ Motion Control ▪ Hydraulic ▪ Pneumatic ▪ Electrical ▪ Mechanical ▪ (800) 426-5480 ▪ www.cmafh.com

Operation at Ambient Temperatures > 40 °C

Note: In the following it is understood that the other conditions (max. installation altitude of 1000 m, no internal braking power, three-phase operation) are kept!

The maximum allowed ambient temperature is 55 °C. Operation above an ambient temperature of 40 °C causes a derating of 2% per 1 °C:

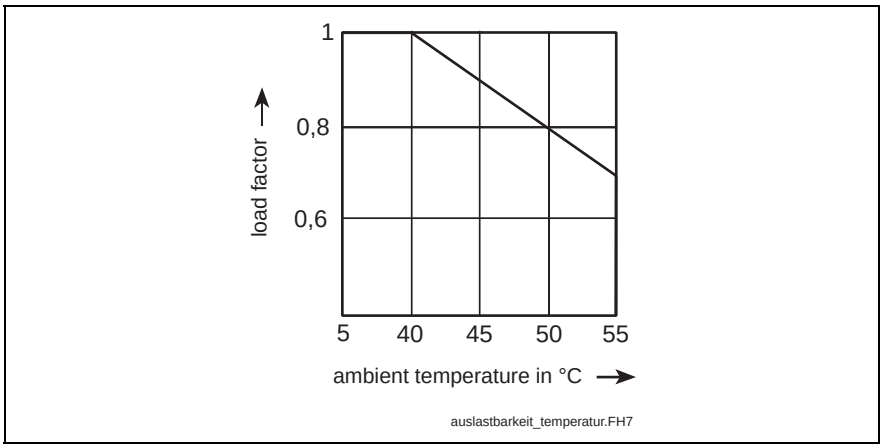

Fig. 4-12: Derating at ambient temperatures > 40 °C

Operation with Internal Braking Power

Note: In the following it is understood that the other conditions (max. ambient temperature of 40 °C, max. installation altitude of 1000 m, three-phase operation) are kept!

Using the internal braking resistor causes additional power dissipation (heat) in the drive controller and derating (200 W and 400 W drive controllers only):

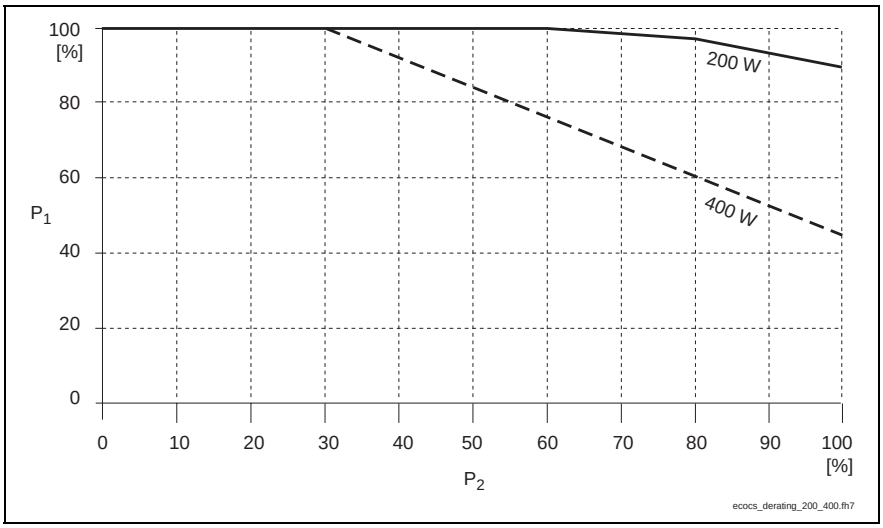

Fig. 4-13: Derating when using the internal braking resistor

Note: In case the above derating causes problems in servo operation, you can use the full power of the drive controller by removing the existing jumper at the RB2 and RB3 terminal connectors and connecting an external braking resistor to the RB1 and RB2 terminal connectors.

Courtesy of CMA/Flodyne/Hydradyne ▪ Motion Control ▪ Hydraulic ▪ Pneumatic ▪ Electrical ▪ Mechanical ▪ (800) 426-5480 ▪ www.cmafh.com

Single-Phase Operation

Note: 750 W devices (DKCxx.3-0018) are designed for three-phase operation! Single phase operation reduces the service life of the drive controllers significant.

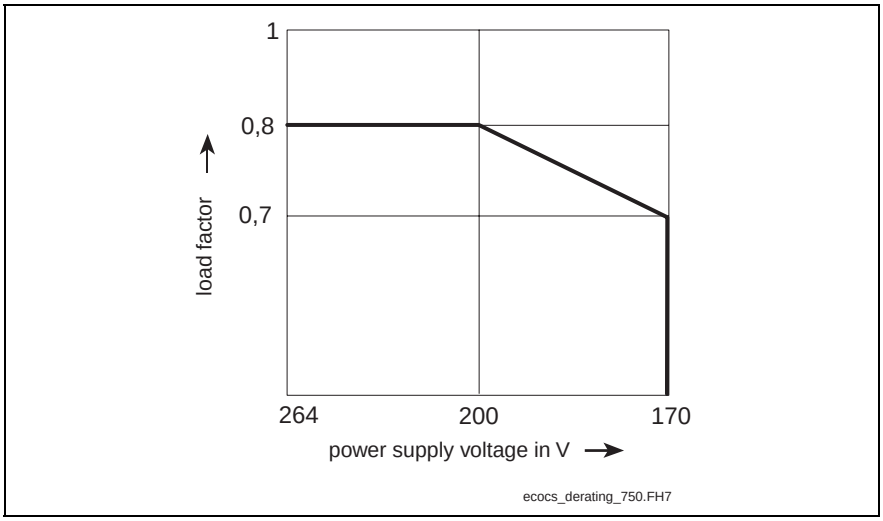

Fig. 4-14: Derating with single-phase operation (750 W devices)

With 100, 200, and 400 W devices single-phase operation doesn't cause derating.

Courtesy of CMA/Flodyne/Hydradyne ▪ Motion Control ▪ Hydraulic ▪ Pneumatic ▪ Electrical ▪ Mechanical ▪ (800) 426-5480 ▪ www.cmafh.com

Control Voltage Connection

(data at 25 °C ambient temperature)

Designation	Symbol	Unit	DKC**.3
control voltage	U_{N3}	V	AC200-240 +10%, -15%
frequency	f	Hz	50/60
max. allowed undervoltage	U_{N3max}	V	AC 264 (= 240V +10%)
max. inrush current	I_{EIN3}	A	37.5 at AC 264 V (= 240 V +10%)
max. input capacitance	C_{N3}	mF	0.039
power consumption (at X1 at U_N=200 V)	P_{N3}	W	SERCOS Drive: 8.6 basic device: 7.2 basic device + SERCOS: 8.8 basic device + DeviceNet: 8.6 basic device + PROFIBUS: 10.2
power consumption (at X1 at U_N=240 V)	P_{N3}	W	SERCOS Drive: 9.0 basic device: 7.6 basic device + SERCOS: 9.1 basic device + DeviceNet: 9.0 basic device + PROFIBUS: 10.6

Fig. 4-15: Control voltage connection

Rexroth Bosch Group

Courtesy of CMA/Flodyne/Hydradyne ▪ Motion Control ▪ Hydraulic ▪ Pneumatic ▪ Electrical ▪ Mechanical ▪ (800) 426-5480 ▪ www.cmafh.com

4.5 Control and Display Elements (H1, S1, S2, S3)

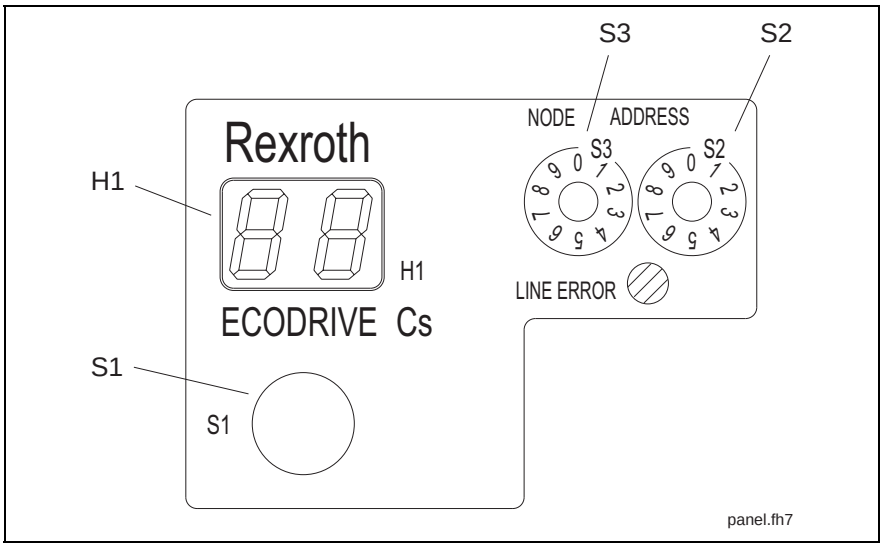

Fig. 4-16: H1: diagnostic display, S1: button, S2, S3: address switch

H1 (Diagnostic Display)

For display of the diagnostic messages (errors and operating states).

S1 (Button)

Depending on the situation the S1 button has different functions:

- **Normal operation**:
  Reset button for resetting error diagnoses.
- **Device initialization** (after switching on the supply):
  button for activating the bootstrap loader (firmware update)
- With **baud rate scan**:
  button for activating the manual mode
- **Commissioning**:
  During baud rate scan press button for at least 5 seconds to get into the setting mode.

S2, S3 (Address Switch)

Switch for setting the drive address.

Address Switch S2, S3
Drive Address

The address of the drive can be set by means of two ten-stage switches. The address can be a number from 1 to 99.

Example:

switch setting S3 = 9 (tens unit)

switch setting S2 = 1 (unit)

drive address = 9 * 10 + 1 = 91

Note: The unit is supplied with the address not being pre-set.

The setting of switches S2 and S3 depends on the type series, the firmware which is used or the desired drive address.

⇒ See Functional Description of firmware

Courtesy of CMA/Flodyne/Hydradyne ▪ Motion Control ▪ Hydraulic ▪ Pneumatic ▪ Electrical ▪ Mechanical ▪ (800) 426-5480 ▪ www.cmafh.com

4.6 CE Label, C-UL Listing, Tests

CE Label

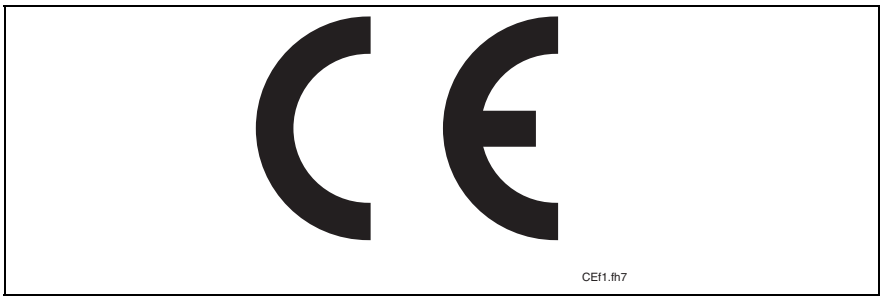

Fig. 4-17: CE label

C-UL Listing

In accordance with UL508 C.

The devices are C-UL-US listed under the item "Rexroth".

Tests

High voltage test	in accordance with EN50178
Insulation voltage test	in accordance with EN50178s
Separation between control and power voltage circuits	in accordance with EN50178
Air gaps and leakage distances	in accordance with EN50178

Fig. 4-18: Tests

Courtesy of CMA/Flodyne/Hydradyne ▪ Motion Control ▪ Hydraulic ▪ Pneumatic ▪ Electrical ▪ Mechanical ▪ (800) 426-5480 ▪ www.cmafh.com

Notes

Courtesy of CMA/Flodyne/Hydradyne ▪ Motion Control ▪ Hydraulic ▪ Pneumatic ▪ Electrical ▪ Mechanical ▪ (800) 426-5480 ▪ www.cmafh.com

5 Electrical Connections

5.1 Connections Independent of the Device

Views of the Devices and Terminal Connector Designations

Front View

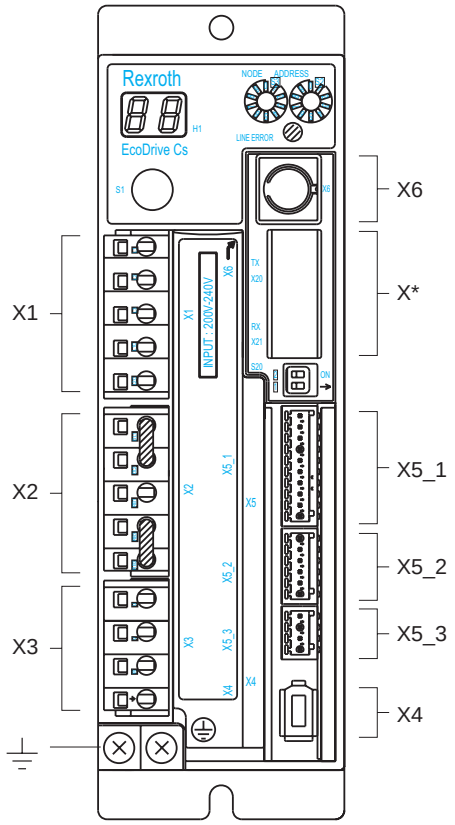

Fig. 5-1: Front view with terminal connector designations

Description of connections:

Connection	Designation	See page
mains, control voltage	X1	5-5
reactance coil, braking resistor	X2	5-6
motor	X3	5-9
encoder	X4	5-12
digital inputs	X5_1	5-13
digital outputs	X5_2	5-15
holding brake	X5_3	5-18
RS232	X6	5-21
master communication	X*	5-23
ground	⏚	5-11

Fig. 5-2: Connections

Pin Assignments

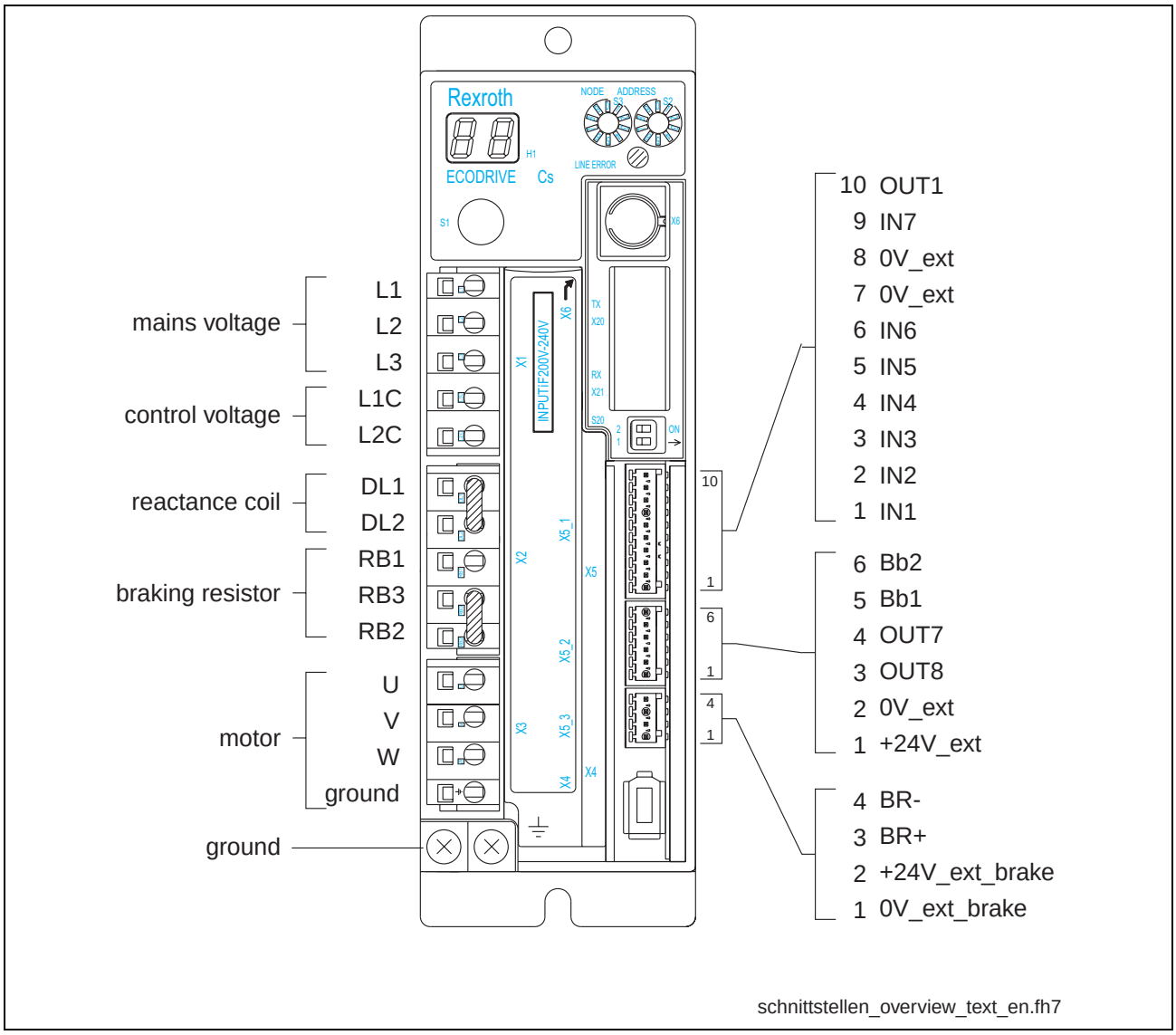

Fig. 5-3: Pin assignments of the interfaces

The digital inputs (IN1…7) and outputs (OUT1…3) are free configurable. At delivery the inputs and outputs are preconfigured (see page 5-13 onward).

Courtesy of CMA/Flodyne/Hydradyne ▪ Motion Control ▪ Hydraulic ▪ Pneumatic ▪ Electrical ▪ Mechanical ▪ (800) 426-5480 ▪ www.cmafh.com

Courtesy of CMA/Flodyne/Hydradyne ▪ Motion Control ▪ Hydraulic ▪ Pneumatic ▪ Electrical ▪ Mechanical ▪ (800) 426-5480 ▪ www.cmafh.com

Schematic Overall Connection Diagram

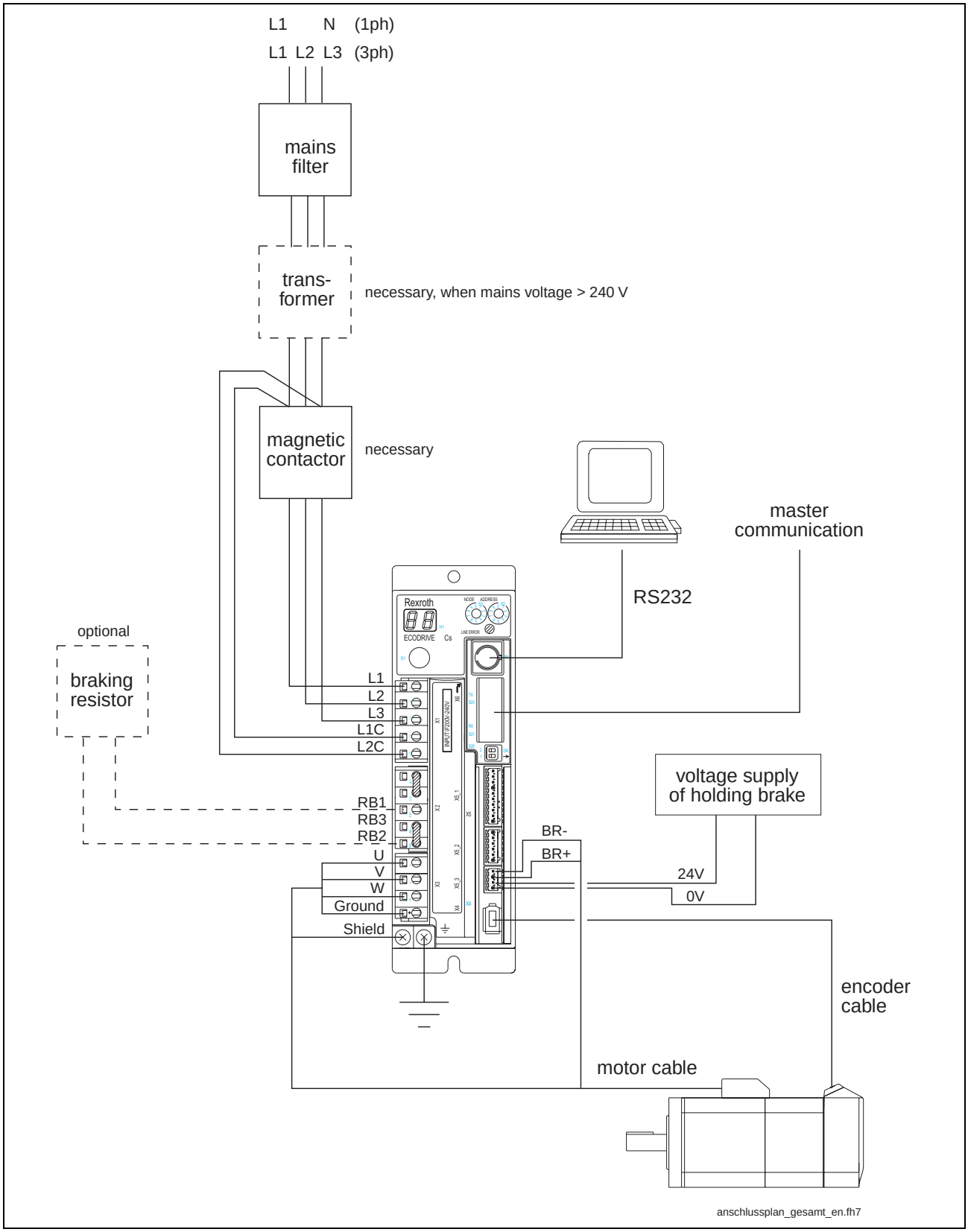

Fig. 5-4: Schematic overall connection diagram

Concerning description of connections: see table on page 5-1.

Concerning cables: see chapter 10.1

Courtesy of CMA/Flodyne/Hydradyne ▪ Motion Control ▪ Hydraulic ▪ Pneumatic ▪ Electrical ▪ Mechanical ▪ (800) 426-5480 ▪ www.cmafh.com

Meaning	Note
mains filter	Is used for radio interference suppression
transformer	When the mains voltage is higher than 240 V you must use a transformer (e.g. autotransformer) to reduce the voltage
magnetic contactor	Switches the supply voltage of the motor on or off. From the input of the magnetic contactor the lines for the control voltage are branched off. L1-conductor at L1C and N-conductor at L2C.
braking resistor	By connecting an external braking resistor a derating of the continuous DC bus power can be prevented. Connection is realized at RB1 and RB2. If you do not use any external braking resistor, the RB2 and RB3 connections must be jumpered. The braking resistor is available as an accessory.
voltage supply of holding brake	If a motor with holding brake is used, the voltage supply of the holding brake must be realized externally. The holding brake is connected at the X5_3 interface (see page 5-18). Data for the holding brake: see chapter "Holding Brake" on page 8-29
encoder cable	If a motor with encoder is used, an encoder cable must be connected to the X4 interface. The encoder cable is available as an accessory.
motor cable	The motor cable contains: • the lines for connecting the motor (U, V, W, ground) • the line with ring cable lug for connecting the cable shield to the ground connection of the drive controller • the separately shielded lines including connector for connecting the holding brake to the X5_3 interface (BR+, BR-) The motor cable is available as an accessory.
RS232 cable	The RS232 cable is used to connect a PC to the drive controller. The RS232 cable is available as an accessory.
master communication	Depending on the design of the drive controller, one of the following master communications can be used: • SERCOS • DeviceNet • PROFIBUS-DP • CANopen

Fig. 5-5: Notes on the schematic overall connection diagram

Courtesy of CMA/Flodyne/Hydradyne ▪ Motion Control ▪ Hydraulic ▪ Pneumatic ▪ Electrical ▪ Mechanical ▪ (800) 426-5480 ▪ www.cmafh.com

X1, Mains and Control Voltage

DANGER

Lethal electric shock caused by live parts with more than 50 V!

⇒ Before starting to work on the drive controller switch off the voltage supply via the main switch or the circuit breaker.

⇒ Always mount or dismount both connectors (motor connection and mains connection) at the drive controller.

⇒ Observe the notes in the "Safety Instructions for Electric Drives and Controls" chapter.

Technical Data of the Terminal Connector

Graphic Representation

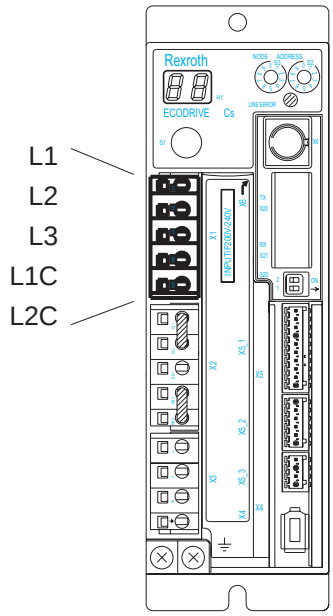

Fig. 5-6: Terminal connector X1

Design

Type	Number of poles	Type of design
spring tension	5	socket on connector

Fig. 5-7: Design

Connection Cross Section

Max. connectable cross section [mm²]	Cross section in AWG gauge No.
2.5	12

Fig. 5-8: Connection cross section

Connection of Mains and Control Voltage

See chapter 6 Mains and Supply Voltage Connection

Rexroth Bosch Group

Courtesy of CMA/Flodyne/Hydradyne ▪ Motion Control ▪ Hydraulic ▪ Pneumatic ▪ Electrical ▪ Mechanical ▪ (800) 426-5480 ▪ www.cmafh.com

X2, Additional Choke and Braking Resistor

Technical Data of the Terminal Connector

Graphic Representation

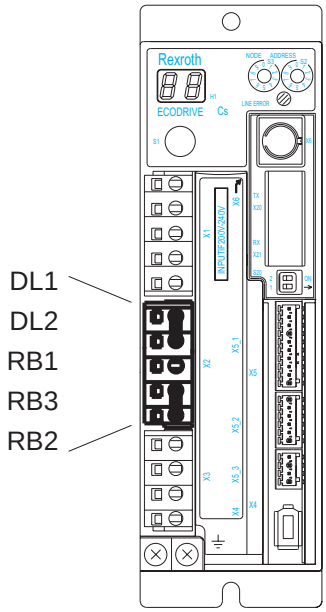

Fig. 5-9: Terminal connector X2

Design

Type	Number of poles	Type of design
spring tension	5	socket on connector

Fig. 5-10: Design

Connection Cross Section

Cross section single-core [mm²]	Cross section in AWG gauge No.
0,75 - 2	18 - 14

Fig. 5-11: Connection cross section

Courtesy of CMA/Flodyne/Hydradyne ▪ Motion Control ▪ Hydraulic ▪ Pneumatic ▪ Electrical ▪ Mechanical ▪ (800) 426-5480 ▪ www.cmafh.com

DL1, DL2: Additional Choke

By connecting an additional choke it is possible to increase the allowed continuous DC bus power.

Note: If there isn't any choke used these connections must be jumpered. A wire bridge is supplied together with the device.

Note: Rexroth doesn't deliver additional chokes for Rexroth EcoDrive Cs drives.

Choke Connection

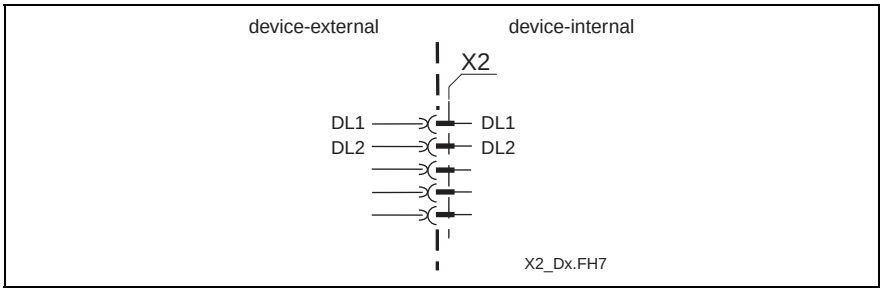

Fig. 5-12: Connection for choke

Courtesy of CMA/Flodyne/Hydradyne ▪ Motion Control ▪ Hydraulic ▪ Pneumatic ▪ Electrical ▪ Mechanical ▪ (800) 426-5480 ▪ www.cmafh.com

RB1, RB2, RB3: Braking Resistor

Note: The internal braking resistor causes a derating of the continuous DC bus power. See page 4-12.

By connecting an external braking resistor the derating of the continuous DC bus power can be prevented.

Note: When an external braking resistor is used, the drive has to be informed of this fact by means of the **DriveTop** commissioning software (call in DriveTop by menu item "Drive Functions -> Drive controller")

Accessory An external braking resistor is available as an accessory.

Data Data for the internal braking resistor: see chapter 4.4 "Electrical Data"

Braking Resistor Connection

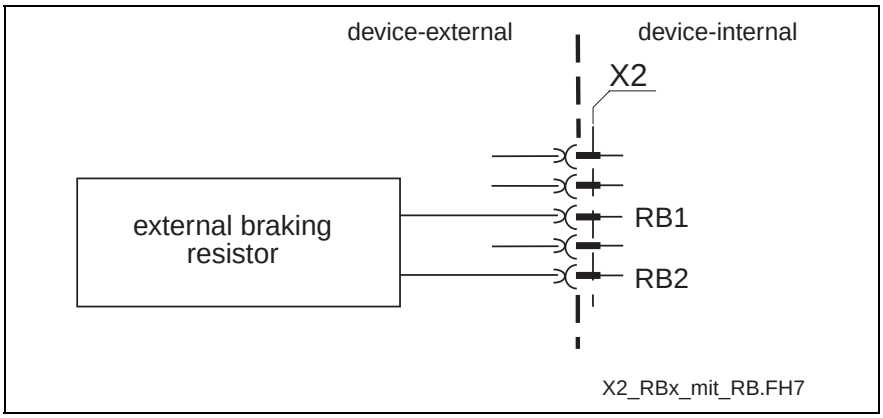

Fig. 5-13: Connection for braking resistor

Note: If you do not use any external braking resistor, the RB2 and RB3 connections must be jumpered.

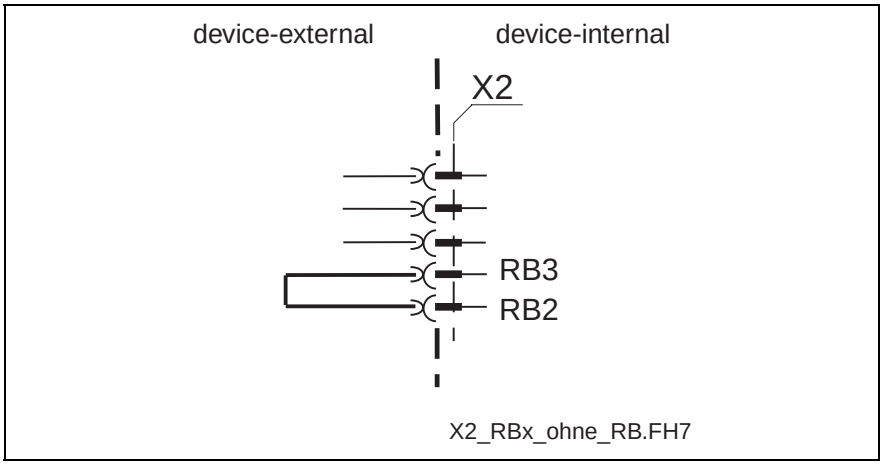

Fig. 5-14: Jumper on RB2 and RB3

Courtesy of CMA/Flodyne/Hydradyne ▪ Motion Control ▪ Hydraulic ▪ Pneumatic ▪ Electrical ▪ Mechanical ▪ (800) 426-5480 ▪ www.cmafh.com

X3, Motor

DANGER

Lethal electric shock caused by live parts with more than 50 V!

⇒ Before starting to work on the drive controller switch off the voltage supply via the main switch or the fuse.

⇒ Always mount or dismount both connectors (motor connection and mains connection) at the drive controller.

⇒ Observe the notes in the "Safety Instructions for Electric Drives and Controls" chapter.

Technical Data of the Terminal Connector

Graphic Representation

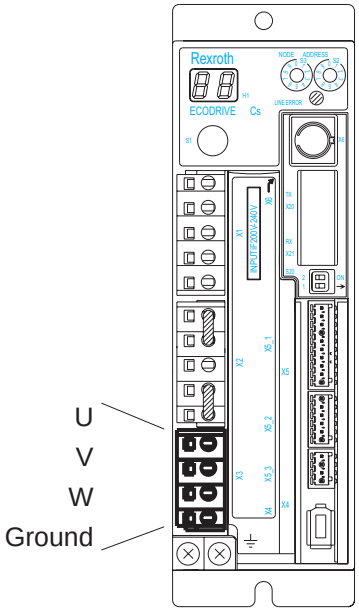

Fig. 5-15: Terminal connector X3

Design

Type	Number of poles	Type of design
spring tension	4	socket on connector

Fig. 5-16: Design

Connection Cross Section

Max. connectable cross section [mm²]	Max. cross section in AWG gauge No.:
0,75 - 2	18 - 14

Fig. 5-17: Connection cross section

Courtesy of CMA/Flodyne/Hydradyne ▪ Motion Control ▪ Hydraulic ▪ Pneumatic ▪ Electrical ▪ Mechanical ▪ (800) 426-5480 ▪ www.cmafh.com

Motor Cables

For connecting drive controller and motor please use the appropriate Rexroth motor power cables. See chapter 10.1

Cable length:

The maximum cable length is **40 m** with:

- ready-made Rexroth cable
- ambient temperature of ≤ 40 °C according to EN 60204
- maximum switching frequency of 8 kHz

WARNING

No warranty!

If cables manufactured by a company other than Bosch Rexroth resp. cables longer than 40 m are used, the Bosch Rexroth warranty for the entire drive system becomes invalid.

Use ready-made Rexroth cables!

Courtesy of CMA/Flodyne/Hydradyne ▪ Motion Control ▪ Hydraulic ▪ Pneumatic ▪ Electrical ▪ Mechanical ▪ (800) 426-5480 ▪ www.cmafh.com

Ground Connection

Technical Data of the Terminal Connector

Graphic Representation

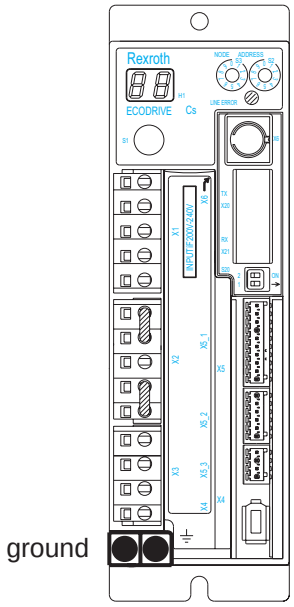

Fig. 5-18: Ground connection

Design

Type	Number	Type of design
terminal block	2	threaded terminal end for M4 ring cable lugs

Fig. 5-19: Design

Connection Cross Section

Cross section single-core [mm²]	Max. cross section in AWG gauge No.
2.0	14

Fig. 5-20: Connection cross section

Contrary to the safety instruction in chapter 3.5 a copper conductor cross section of 2 mm^2 would be sufficient.

Cable Length

Maximum **1 m**

Rexroth Bosch Group

Courtesy of CMA/Flodyne/Hydradyne ▪ Motion Control ▪ Hydraulic ▪ Pneumatic ▪ Electrical ▪ Mechanical ▪ (800) 426-5480 ▪ www.cmafh.com

X4, Encoder

Technical Data of the Terminal Connector

Graphic Representation

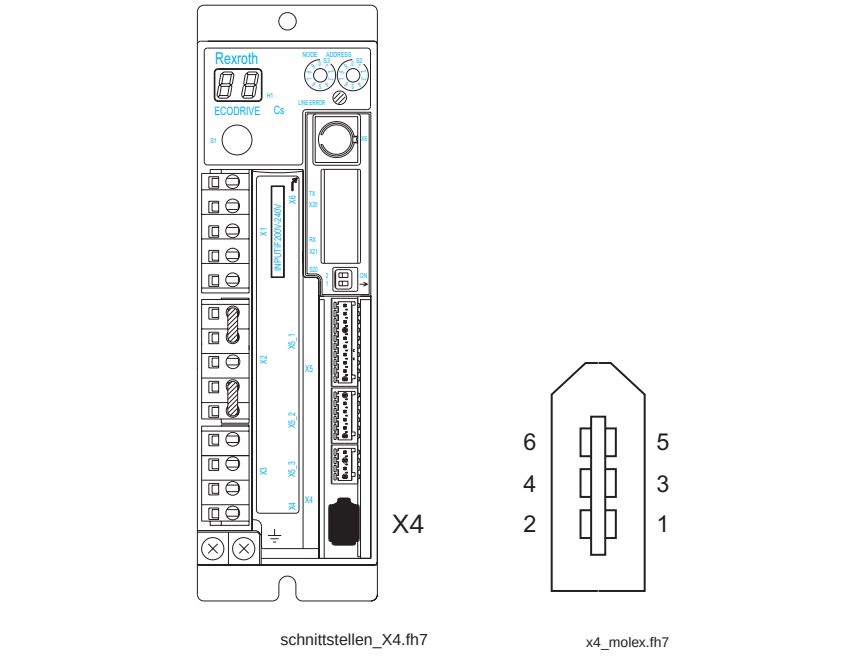

Fig. 5-21: Terminal connector X4

Design

Type	Number of poles	Type of design
socket	6	socket on device

Fig. 5-22: Design

Connectors

Encoder Connection

1	encoder voltage supply output (5V)
2	encoder voltage supply output (0V)
3	positive pole of battery*
4	negative pole of battery*
5	encoder signal input (PS)
6	encoder signal input (PS negated)

* battery not required if the absolute encoder is used as an incremental encoder; the battery is set into the drive controller (see chapter "Motors" → "Startup, Operation, and Maintenance" → "Maintenance" → "Battery")

Fig. 5-23: Encoder connection

Shield Connection shield is grounded by means of shielding plate in connector

Encoder Cable maximum allowed length of encoder cable: **40 m**

data for encoder cable: see chapter 10.1

Courtesy of CMA/Flodyne/Hydradyne ▪ Motion Control ▪ Hydraulic ▪ Pneumatic ▪ Electrical ▪ Mechanical ▪ (800) 426-5480 ▪ www.cmafh.com

X5_1: Digital Inputs

Technical Data of the Terminal Connector

Graphic Representation

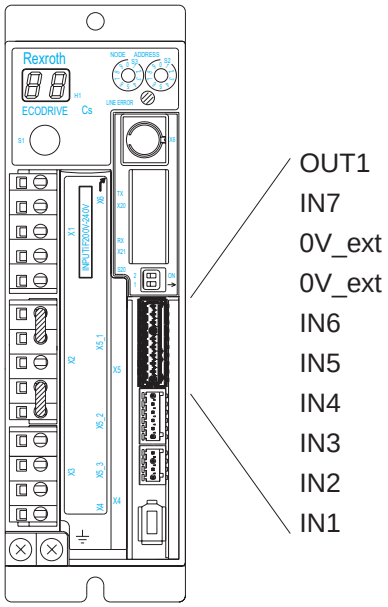

Fig. 5-24: Terminal connector X5_1

Design

Type	Number of poles	Type of design
spring tension	10	socket on connector

Fig. 5-25: Design

Connection Cross Section

Cross section single-core [mm²]	Cross section in AWG gauge No.
0,25 - 0.5	23 - 20

Fig. 5-26: Connection cross section

Note: The digital inputs can be configured by means of the "Digital inputs" firmware function in conjunction with the freely configurable signal control word. The following paragraph describes the default configuration of the digital inputs.

Courtesy of CMA/Flodyne/Hydradyne ▪ Motion Control ▪ Hydraulic ▪ Pneumatic ▪ Electrical ▪ Mechanical ▪ (800) 426-5480 ▪ www.cmafh.com

Connections

Digital Input Connection

10	OUT1
9	IN7
8	0 V ext (connect to negative pole of external 24 V power supply)
7	0 V ext (connect to negative pole of external 24 V power supply)
6	IN6
5	IN5
4	IN4
3	IN3
2	IN2
1	IN1

Fig. 5-27: Digital inputs

Note: Default configuration: see Functional Description of firmware.

Note: As the digital inputs are galvanically separated, the reference conductor of the separate power supply unit has to be connected to GND.

Input circuitry of Digital Inputs

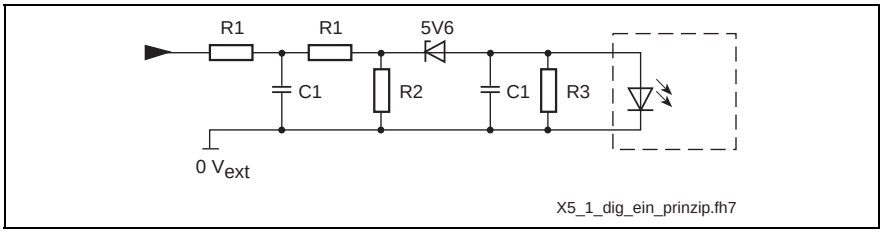

R1: 1k
R2: 10k
R3: 4k7
C1: no data

Fig. 5-28: Input circuitry (block diagram)

Inputs of Digital Inputs

voltage:	min.	max.
High	5 V	30 V
Low	-3 V	11 V
current:	min.	max.
High	6 mA	30 mA
Low	no data	30 mA
input resistance	12 kOhm	

Fig. 5-29: Inputs

Courtesy of CMA/Flodyne/Hydradyne ▪ Motion Control ▪ Hydraulic ▪ Pneumatic ▪ Electrical ▪ Mechanical ▪ (800) 426-5480 ▪ www.cmafh.com

X5_2: Digital Outputs

Technical Data of the Terminal Connector

Graphic Representation

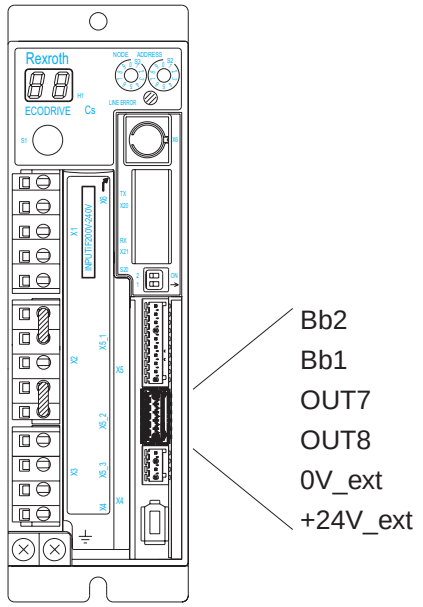

Fig. 5-30: Terminal connector X5_2

Design

Type	Number of poles	Type of design
spring tension	6	socket on connector

Fig. 5-31: Design

Connection Cross Section

Cross section single-core [mm²]	Cross section in AWG gauge No.
0,25 - 0.5	23 - 20

Fig. 5-32: Connection cross section

Note: The digital outputs can be configured by means of the "Digital outputs" firmware function in conjunction with the freely configurable signal status word. The following paragraph describes the default configuration.

Connections (Default Configuration)

Connection of Digital Outputs

6	"ready for operation" contact (relay output; N/O contact)
5	"ready for operation" contact (relay output; N/O contact)
4	OUT7
3	OUT8
2	0 V ext
1	+24 V ext

Fig. 5-33: Control outputs

Courtesy of CMA/Flodyne/Hydradyne ▪ Motion Control ▪ Hydraulic ▪ Pneumatic ▪ Electrical ▪ Mechanical ▪ (800) 426-5480 ▪ www.cmafh.com

Note: Default configuration: see Functional Description of firmware.

OUT7, OUT8

Output Circuitry of Digital Outputs

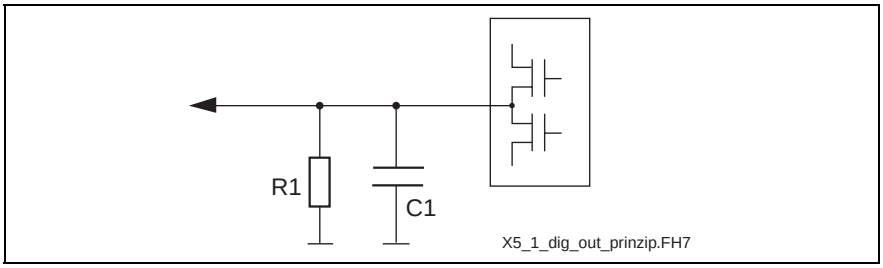

R1: 20k
C1: no data

Fig. 5-34: Output circuitry (block diagram)

Technical Data

output voltage:	min.	max.
High	16 V	24 V_{ext} - 1 V
Low	-0,5 V	1,5 V
output current I_{out}	80 mA	
rise time / fall time without load with load	 65 µs / 40 µs 70 µs / 6 µs	
overload protection	short-circuit proof	
electrical isolation	optocoupler	

Fig. 5-35: Technical Data

Bb1, Bb2

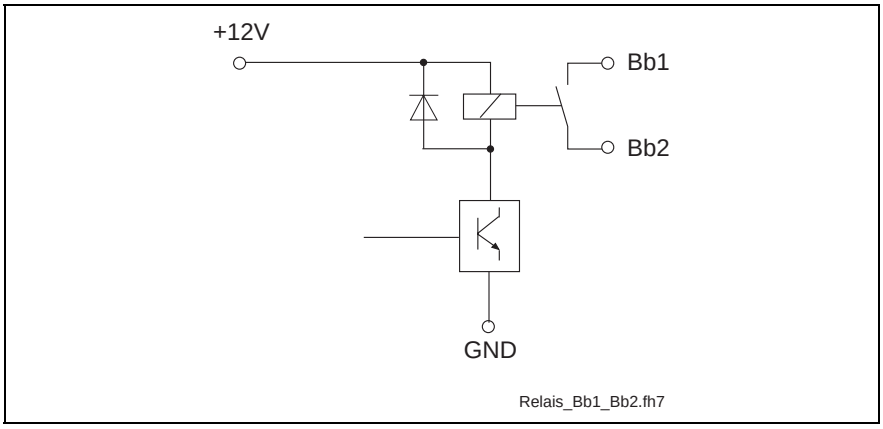

Abb. 5-36: Bb1, Bb2 relay

Loadability of the connection Bb:

max. switching voltage:	DC 40 V
max. switching current:	DC 1 A
max. continuous current:	DC 1 A
Minimum contact load:	10 mA
Guaranteed number of switching operations at max. time constant of load < 50 ms:	250,000

Courtesy of CMA/Flodyne/Hydradyne ▪ Motion Control ▪ Hydraulic ▪ Pneumatic ▪ Electrical ▪ Mechanical ▪ (800) 426-5480 ▪ www.cmafh.com

Switching states Bb:

The Bb contacts opens:

- if control voltage for drive controller is not applied
- if 24 volts not present at the emergency stop input when the E-stop function is activated (depends on parameterization, see Functional Description).
- with an error in the drive (depends on parameterization, see firmware Functional Description: "Power off on error").

How to use the contact, see page 6-17

WARNING

Damage possible if Bb contact not connected!

The ready to operate contact Bb acknowledges the drive is ready for mains voltage.

⇒ Integrate Bb contact as per "Control Circuits for the Mains Connection".

⇒ The evaluation of the Bb contact by a PLC may not cause any operating delay of more than 10 ms.

Courtesy of CMA/Flodyne/Hydradyne ▪ Motion Control ▪ Hydraulic ▪ Pneumatic ▪ Electrical ▪ Mechanical ▪ (800) 426-5480 ▪ www.cmafh.com

X5_3: Holding Brake

DANGER

Dangerous movements! Danger to personnel from falling or dropping axes!

⇒ The optionally delivered motor holding brake or an external brake controlled by the drive controller are not sufficient to guarantee the safety of personnel!

⇒ Personnel safety must be achieved using higher-ranking, fail-safe procedures:

Dangerous areas should be blocked off with fences or grids.

Additionally secure vertical axes against falling or sinking after switching off the motor power by, for example:

- mechanically blocking the vertical axis,
- adding an external braking/catching/clamping mechanism or
- providing sufficient counterbalance for the axis.

Switching performance: see Functional Description of firmware.

Technical Data of the Terminal Connector

Graphic Representation

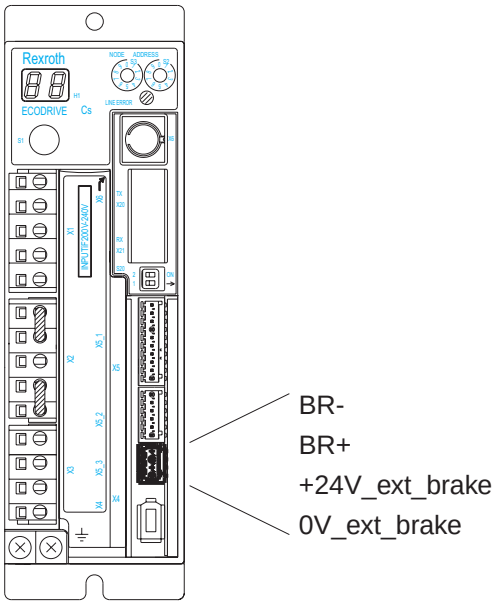

Fig. 5-37: Terminal connector X5_3

Design

Type	Number of poles	Type of design
spring tension	4	socket on connector

Fig. 5-38: Design

Courtesy of CMA/Flodyne/Hydradyne ▪ Motion Control ▪ Hydraulic ▪ Pneumatic ▪ Electrical ▪ Mechanical ▪ (800) 426-5480 ▪ www.cmafh.com

Connection Cross Section

Max. cross section single-core [mm²]	Cross section in AWG gauge No.
0,25 - 0.5	23 - 20

Fig. 5-39: Connection cross section

BR+, BR- Connection

4	holding brake-
3	holding brake+
2	+24V_ext_brake
1	0V_ext_brake

Fig. 5-40: Holding brake and voltage connection

Load Capacity of the BR+, BR- connection:

max. switching voltage	DC 36 V
max. switching current	DC 1 A
max. continuous current	DC 1 A
voltage drop electronic contact	100 mV
guaranteed number of switching operations	unlimited (wear-resistant electronic contact)
short-circuit and overload protection	present

Voltage connection for brake

Note: The motor holding brake is not supplied by the drive controller. Observe the data of the motor holding brake.

Note: It is impossible to loop through the voltages to other drive controllers. Other drive controllers have to be connected to the voltage source in star-shaped form.

CAUTION

Risk of damage!

⇒ The maximum allowed current load of the terminal connectors for the voltage supply of the brake and the control voltage supply must also be observed in the case of a short circuit.

max. voltage at X5_3.1 referring to X5_3.2:	36 V
current consumption at X5_3.3 and required supply voltage:	see chapter Holding Brake on page 8-29

Courtesy of CMA/Flodyne/Hydradyne ▪ Motion Control ▪ Hydraulic ▪ Pneumatic ▪ Electrical ▪ Mechanical ▪ (800) 426-5480 ▪ www.cmafh.com

Line for Voltage Connection of Brake

line cross section	min. 1 mm^2
voltage stability of a single strand against ground:	≥ 750 V
line routing:	parallel where possible (twist)
max. inductance between 24 V source and X5_3:	100 µH (corresponds to approx. 2 x 75 m)

Controlling the Motor Holding Brake

The drive controller assumes the control of the holding brake.

Courtesy of CMA/Flodyne/Hydradyne ▪ Motion Control ▪ Hydraulic ▪ Pneumatic ▪ Electrical ▪ Mechanical ▪ (800) 426-5480 ▪ www.cmafh.com

X6, Serial Interface RS232

Note: The serial interface (RS232) is required for programming, parameterization and diagnosis during commissioning and servicing.

Technical Data of the Terminal Connector

Graphic Representation

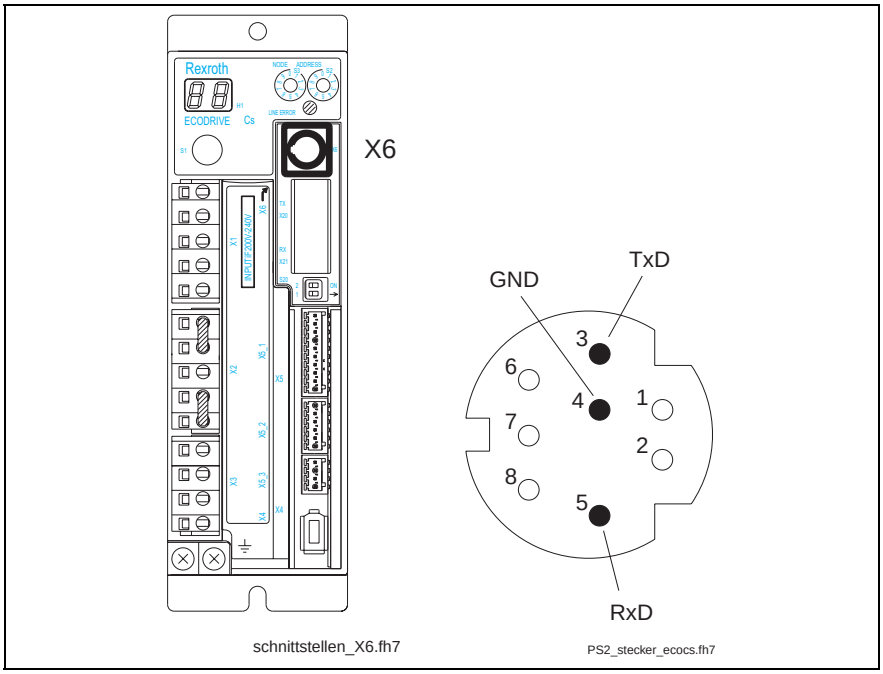

Fig. 5-41: Terminal connector X6

Design

Type	Number of poles	Type of design
MiniDIN	8	socket on device

Fig. 5-42: Design

Connection Cross Section

Cross section single-core [mm²]	Cross section multi-core [mm²]	Cross section in AWG gauge No.
--	0.25 – 0.5	--

Fig. 5-43: Connection cross section

Connection Assignment

-		1
-		2
X2_UART_TxD		3
GND		4
X2_UART_RxD		5
-		6
-		7
-		8

Courtesy of CMA/Flodyne/Hydradyne ▪ Motion Control ▪ Hydraulic ▪ Pneumatic ▪ Electrical ▪ Mechanical ▪ (800) 426-5480 ▪ www.cmafh.com

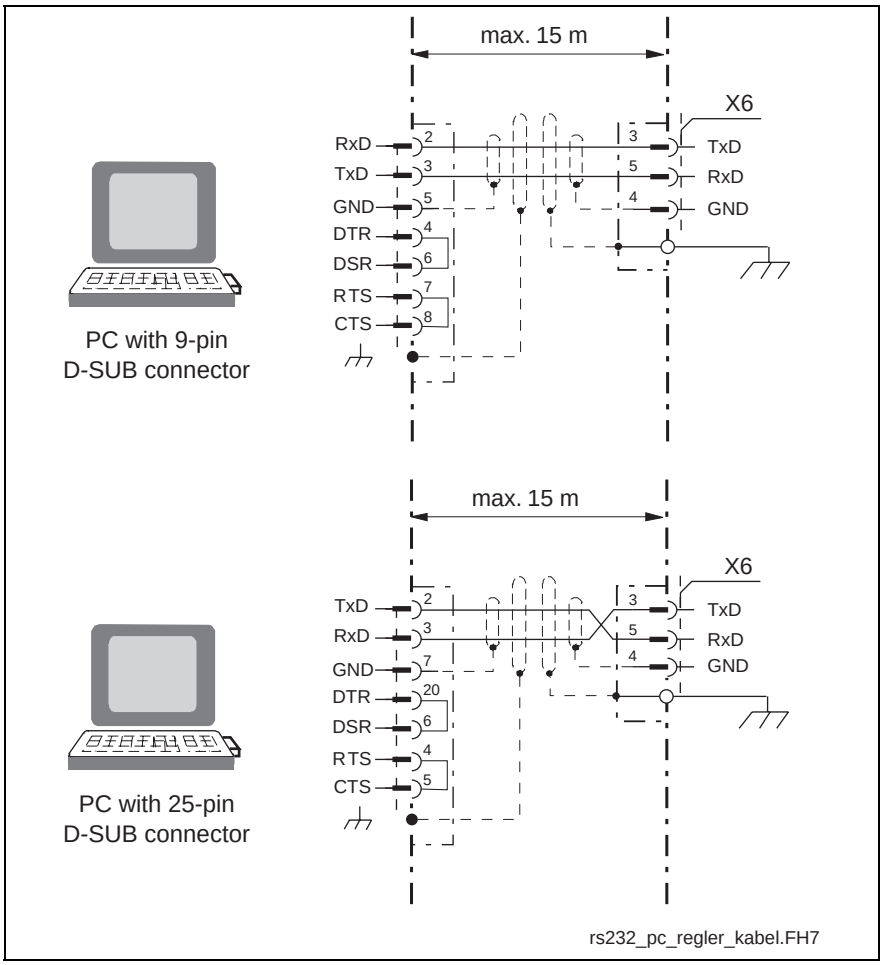

Fig. 5-44: Connecting a PC to the RS232 interface

Features

- number of nodes: a maximum of 1
- transmission distance: a maximum of 15 m
- transmission rates: 9600 and 19200 baud
- 8-bit ASCII protocol
- no parity bit
- 1 stop bit

Particularity

Using the RS232 interface it is possible to parameterize just one drive at a time with the assistance of the DriveTop commissioning program.

Note: RS485 communication is impossible!

Courtesy of CMA/Flodyne/Hydradyne ▪ Motion Control ▪ Hydraulic ▪ Pneumatic ▪ Electrical ▪ Mechanical ▪ (800) 426-5480 ▪ www.cmafh.com

5.2 Connections Dependent on the Device

DKC01.3 – Analog/Parallel Interface

View of Interface to Master Communication

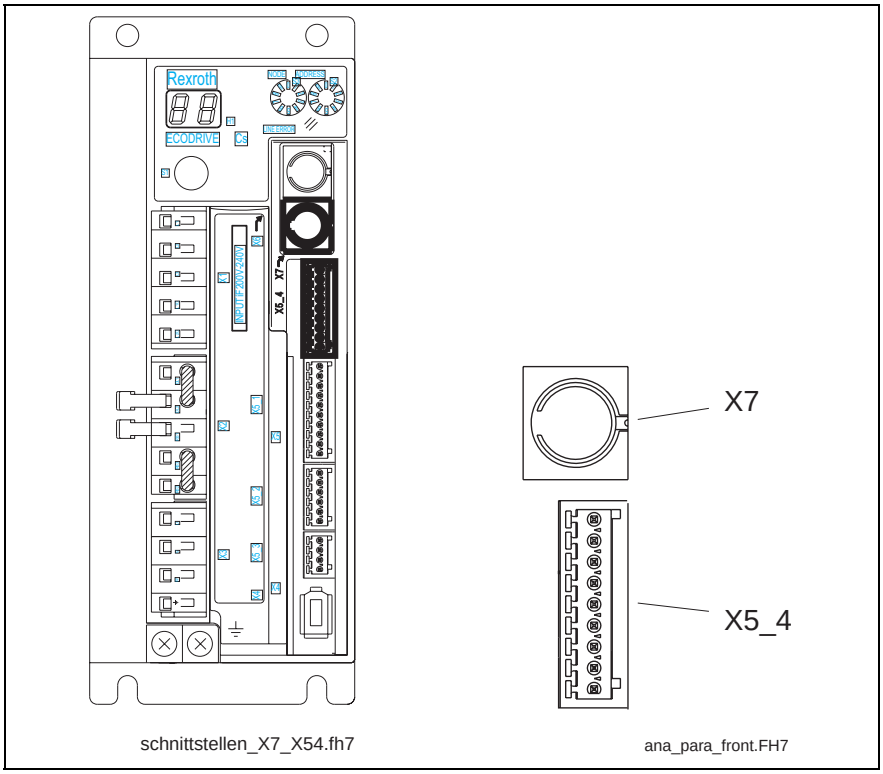

X5_4: Analog and digital I/Os
X7: Incremental and absolute encoder emulation

Fig. 5-45: View of interface to master communication

Courtesy of CMA/Flodyne/Hydradyne ▪ Motion Control ▪ Hydraulic ▪ Pneumatic ▪ Electrical ▪ Mechanical ▪ (800) 426-5480 ▪ www.cmafh.com

X5_4, Analog and Digital I/Os

Design

Type	Number of poles	Type of design
spring tension	9	socket on connector

Fig. 5-46: Design

Connection Cross Section

Max. cross section single-core [mm²]	Cross section in AWG gauge No.
0,25 - 0.5	23 - 20

Fig. 5-47: Connection cross section

Pin Configuration

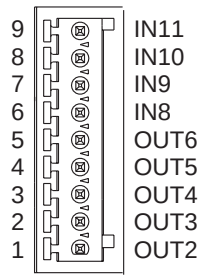

9	IN11 (input)
8	IN10 (input)
7	IN9 (input)
6	IN8 (input)
5	OUT6 (output)
4	OUT5 (output)
3	OUT4 (output)
2	OUT3 (output)
1	OUT2 (output)

Fig. 5-48: Pin configuration

Note: Default configuration: see Functional Description of firmware.

The inputs IN8, IN9 and IN10, IN11 can optionally be configurated as analog inputs (see Functional Description of firmware).

Voltage Range between Analog Inputs

Input working voltage range between analog inputs: ±10V

Resolution

Analog/Digital converter: 12 bits

Courtesy of CMA/Flodyne/Hydradyne ▪ Motion Control ▪ Hydraulic ▪ Pneumatic ▪ Electrical ▪ Mechanical ▪ (800) 426-5480 ▪ www.cmafh.com

X7, Incremental and Absolute Encoder Emulation

Design

Type	Number of poles	Type of design
MiniDIN	8	socket on device

Fig. 5-49: Design

Connection Cross Section

Cross section single-core [mm²]	Cross section multi-core [mm²]	Cross section in AWG gauge No.
--	0.25 – 0.5	--

Fig. 5-50: Connection cross section

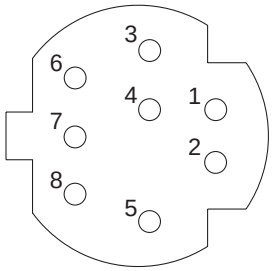

Pin Configuration

Pin	Function	Symbol	I/O
1	Encoder emulation (incremental)	IgsUA1+	O
2	Encoder emulation (incremental)	IgsUA1-	O
3	Ground	0V	-
4	Encoder emulation (incremental)	IgsUA2+	O
	Encoder emulation (SSI)	SSI: CLK+	I
5	Encoder emulation (incremental)	IgsUA2-	O
	Encoder emulation (SSI)	SSI: CLK-	I
6	Ground	0V	-
7	Encoder emulation (incremental)	IgsUA0+	O
	Encoder emulation (SSI)	SSIData+	O
8	Encoder emulation (incremental)	IgsUA0-	O
	Encoder emulation (SSI)	SSIData-	O

Fig. 5-51: Pin configuration

Courtesy of CMA/Flodyne/Hydradyne ▪ Motion Control ▪ Hydraulic ▪ Pneumatic ▪ Electrical ▪ Mechanical ▪ (800) 426-5480 ▪ www.cmafh.com

Connection encoder - emulation

Cable

max. cable length:	40 m
max. allowed capacitance per length unit – between the outputs – between output and 0 V	 5 nF 10 nF
shielding see also Fig. 5-52: Connection of incremental actual position value output and Fig. 5-56: Output of absolute actual position value in SSI format	double shield protected

CAUTION

Damaging potential by utilizing non and single shielded cables.

⇒ Utilize double shielded cables.

Note: The output of the actual position value is updated every 1000 µs. Due to the non synchronized processing of these signals in the controller sampling inaccuracies and beat effects arise.

Courtesy of CMA/Flodyne/Hydradyne ▪ Motion Control ▪ Hydraulic ▪ Pneumatic ▪ Electrical ▪ Mechanical ▪ (800) 426-5480 ▪ www.cmafh.com

Incremental Encoder Emulation

Connection Incremental encoder emulation

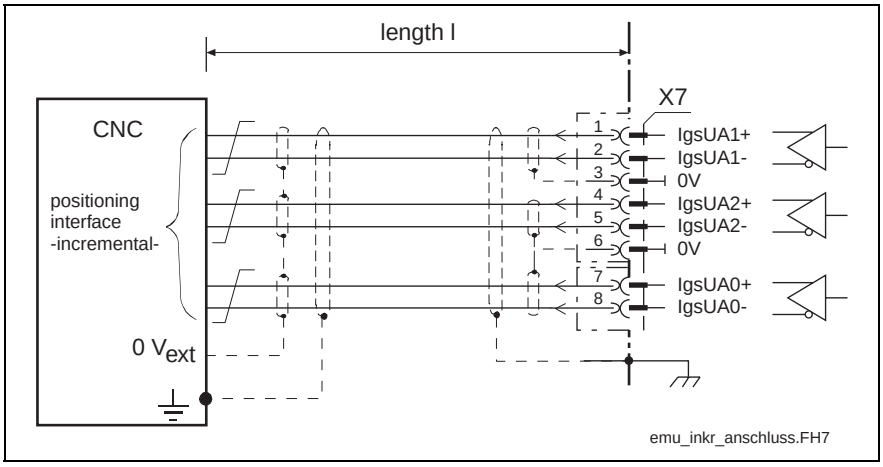

Fig. 5-52: Connection of incremental actual position value output

Differential outputs incremental encoder emulation

Output voltage:	min.	max.
High	2.5 V	5 V
Low	0 V	0.5 V
max. output current I_{out}	I20I mA	
max. load capacitance between output and 0 V	10 nF	
max. output frequency f	1 MHz	
Overload protection	Outputs may not be short circuited. Danger of damage!	

Fig. 5-53: Differential outputs

Note: The differential outputs correspond to RS422 specs.
A termination resistor is required an the controller side, if it is not present then add an external resistance of 150 - 180 Ohm.

Signal for incremental actual position value output

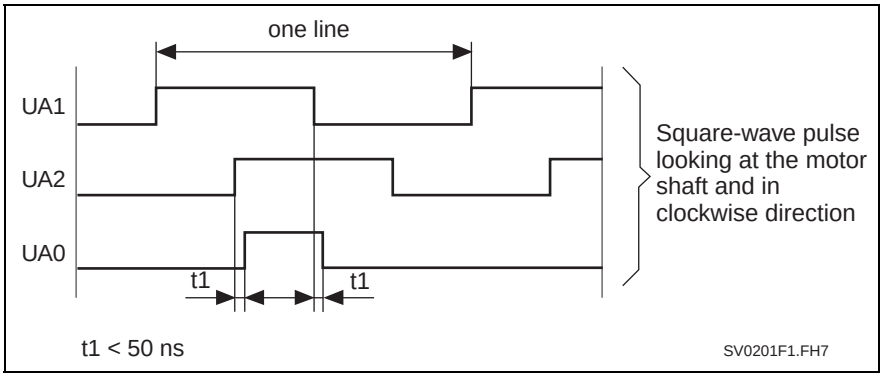

Fig. 5-54: Signal for incremental actual position value output

Output frequency f

$$f = \frac{\text{Line Quantity}}{\text{Revolutions}} \bullet n$$

f: output frequency
n: velocity (rotary)

Fig. 5-55: Calculating the output frequency f

Courtesy of CMA/Flodyne/Hydradyne ▪ Motion Control ▪ Hydraulic ▪ Pneumatic ▪ Electrical ▪ Mechanical ▪ (800) 426-5480 ▪ www.cmafh.com

Note: The output frequency results from the parameter setting.

=> See also firmware Functional Description: "Encoder Emulation".

Pass-band width of the controller-side signal filtering for UA1 and UA2

Note: Conditionally due to the internal signal processing the period duration and the duty cycle of the signals put out vary. Therefore the following requirements of the signal filtering for UA1 and UA2 arise.

$f \geq 500$ kHz $f_{Pass} \geq 1$ MHz

$f < 500$ kHz $f_{Pass} \geq 2 \times f$

Note: The evaluation electronics of the control must be able to process the maximum output frequency of 1 MHz. Otherwise not all of the signal pulses can be evaluated.

RPM Measurement

Note: The frequency measurement is **not** suitable for the RPM measurement derived from the incremental emulator signals.

Courtesy of CMA/Flodyne/Hydradyne ▪ Motion Control ▪ Hydraulic ▪ Pneumatic ▪ Electrical ▪ Mechanical ▪ (800) 426-5480 ▪ www.cmafh.com

Absolut Encoder-Emulation (SSI-format)

Connection Absolute Encoder Emulation

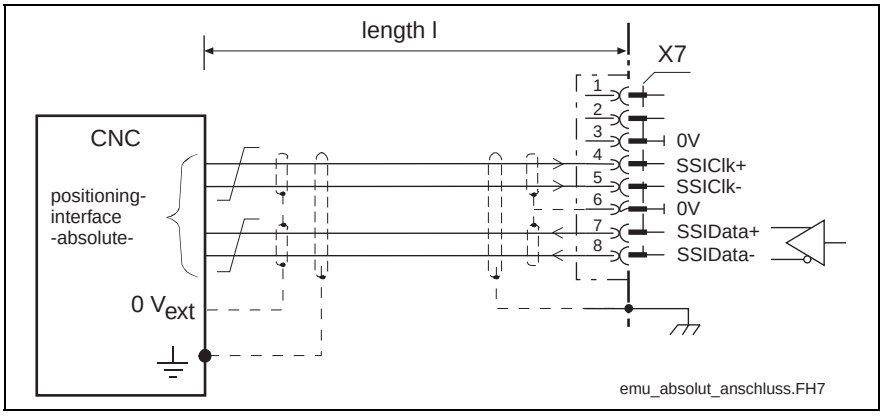

Fig. 5-56: Output of absolute actual position value in SSI format

Differential input circuit absolute encoder emulation

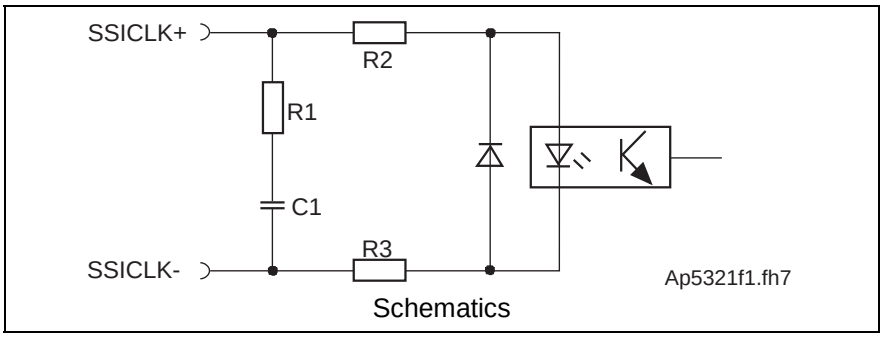

Fig. 5-57: Differential input circuit

Differential inputs absolute encoder emulation

Input voltage:	min.	max.
High	2.5 V	5 V
Low	0 V	0.5 V
Input resistance	see circuit	
Pulse frequency	(100 – 1000 kHz)	
Polarity protected within allowable input voltage range		

Fig. 5-58: Differential outputs

Differential outputs absolute encoder emulation

See "Fig. 5-53: Differential outputs".

Note: The differential outputs correspond to RS422 specs.
A termination resistor is required an the controller side, if it is not present then add an external resistance of 150 - 180 Ohm.

Pulse diagram for absolute actual position output (SSI format)

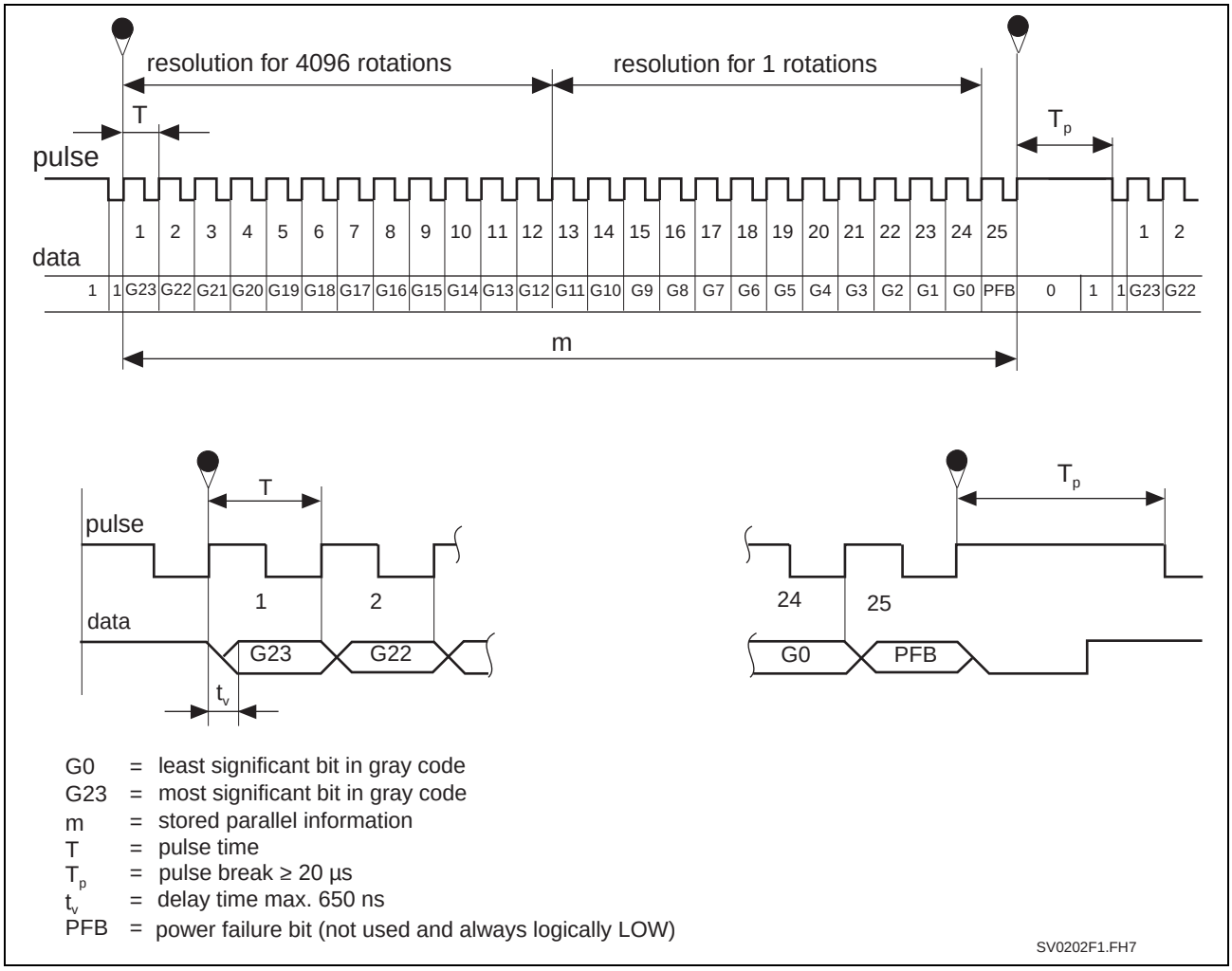

Fig. 5-59: Pulse diagram for absolute actual position output (SSI format)

Courtesy of CMA/Flodyne/Hydradyne ▪ Motion Control ▪ Hydraulic ▪ Pneumatic ▪ Electrical ▪ Mechanical ▪ (800) 426-5480 ▪ www.cmafh.com

Courtesy of CMA/Flodyne/Hydradyne ▪ Motion Control ▪ Hydraulic ▪ Pneumatic ▪ Electrical ▪ Mechanical ▪ (800) 426-5480 ▪ www.cmafh.com

DKC02.3 – SERCOS interface

View of Interface to Master Communication

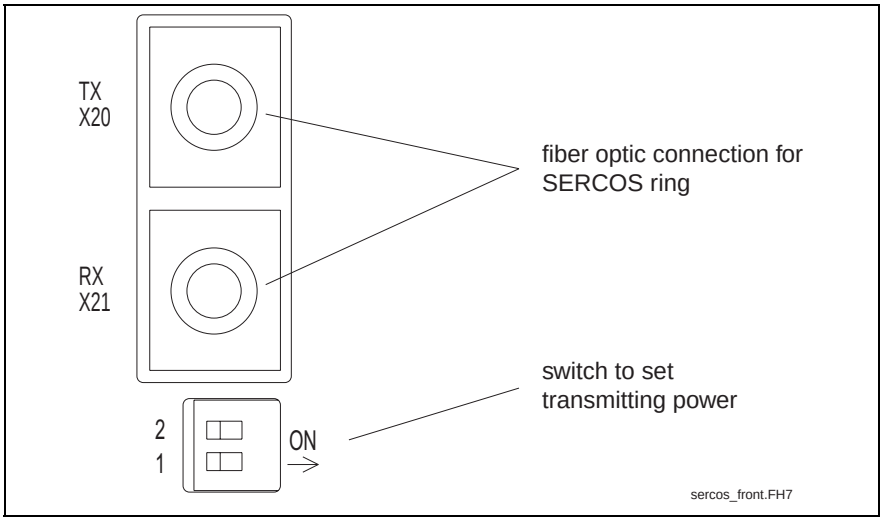

Fig. 5-60: View of interface to master communication

Connection Diagram for SERCOS interface

SERCOS interface Connection

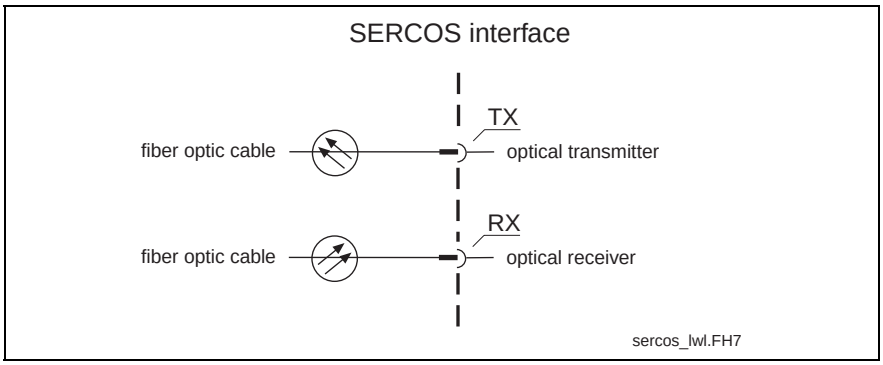

Fig. 5-61: Connection assignment inputs/outputs for DKC02.3

Switch

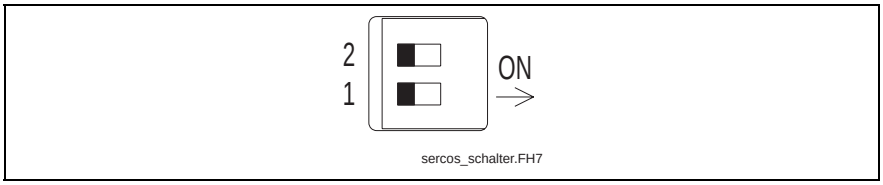

Fig. 5-62: Switch for setting the transmission power

The switch allows setting the transmission power for the SERCOS interface.

The device is delivered with medium transmission power (-4,5 dBm) set.

Switch Position

A switch is in the ON position when the switch lever is positioned on the right side.

Transmission Power

In the following table you can recognize the relationship between switch position, transmission power and max. fiber optic cable length.

Courtesy of CMA/Flodyne/Hydradyne ▪ Motion Control ▪ Hydraulic ▪ Pneumatic ▪ Electrical ▪ Mechanical ▪ (800) 426-5480 ▪ www.cmafh.com

Position of switch S20/1	Position of switch S20/2	Transmission power with opt. high level in dBm	Transmission power with opt. high level in µW	max. length with plastic fiber optic cable	max. length with glass fiber optic cable (*1)
OFF	OFF	-7	200	0...15 m	--
ON	OFF	-4.5	350	15...25 m	--
OFF	ON	-1	800	25...35 m	--
ON	ON	0	1000	35...50 m	0...500 m

Fig. 5-63: Relationship between switch position S20/1, S20/2 and the transmission power

(*1): The data for the maximum lengths of the fiber optic cables only apply if the following preconditions have been met:

- fiber optic cables IKO 982, IKO985 or IKO 001 approved by Rexroth are used
- Connection without separating points. If separating points (couplings) are used, the maximum length for plastic fiber optic cables is reduced by approx. 10 meters, by approx. 100 meters for glass fiber optic cables.

Data Rate The data rate is automatically set by the firmware.

Fiber Optic Cables

Drive controllers with a SERCOS interface are connected to higher-level control units by means of fiber optic cables.

The fiber optic cables (cable, connector, or the entire ready-made cables) have to be ordered separately.

For more detailed information on the subject of "fiber optic cables" please refer to the Application Manual "LWL - Handling" (Fiber Optic Cable Handling), (DOK-CONNEC-CABLE*LWL**-AWxx-EN-P, Part. No. 284755).

The following points are dealt with in the "LWL – Handling" (Fiber Optic Cable Handling) manual:

- general information on fiber optic cables
- basic planning information for optical transmission systems
- instructions for laying fiber optic cables
- attenuation measurement on ready-made fiber optic cable
- available fiber optic FSMA plug-in connectors and fiber optic cables
- instructions for assembling FSMA connectors
- tools for assembling fiber optic cables

Courtesy of CMA/Flodyne/Hydradyne ▪ Motion Control ▪ Hydraulic ▪ Pneumatic ▪ Electrical ▪ Mechanical ▪ (800) 426-5480 ▪ www.cmafh.com

DKC03.3 – Profibus-DP Interface

Note: How to proceed when replacing a master communication module: see page 5-47.

Master Communication Card

ECM01.1-PB01

View of Interface to Master Communication

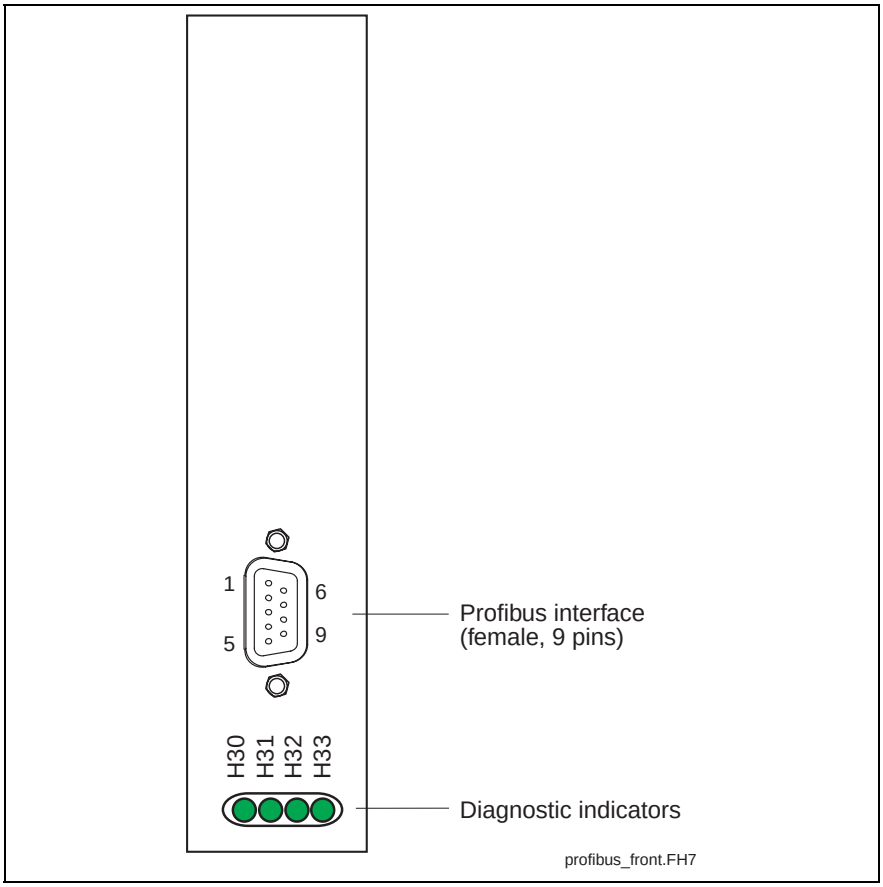

Fig. 5-64: View of interface to master communication

Technical Data of the Terminal Connector

Design

Type	Number of poles	Type of design
D-SUB	9	bushings on unit

Fig. 5-65: Design

Connection Cross Section

Cross section single-core [mm²]	Cross section multi-core [mm²]	Cross section in AWG gauge No.
--	0.08-0.5	--

Fig. 5-66: Connection cross section

Courtesy of CMA/Flodyne/Hydradyne ▪ Motion Control ▪ Hydraulic ▪ Pneumatic ▪ Electrical ▪ Mechanical ▪ (800) 426-5480 ▪ www.cmafh.com

Connection Diagram for Profibus-DP Interface

Connections of Profibus-DP Interface

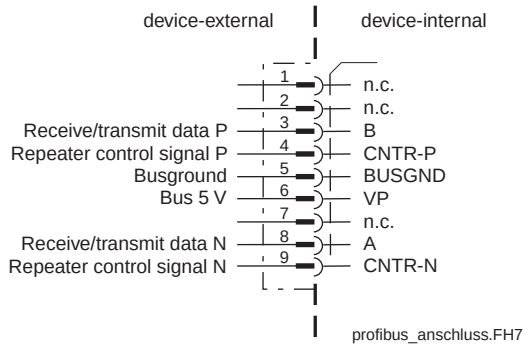

Fig. 5-67: Connection

Compatibility of the Interface according to DIN EN 50 170

Recommended Cable Type according to DIN EN 50 170 – 2, cable type A

Pin Configuration of the Plug-In Connector

Pin	DIR	Signal	Function
1		--	n.c.
2		--	n.c.
3	I/O	RS485+	receive/transmit data-positive
4	O	CNTR-P	repeater control signal
5		0V	0V
6	O	+5V	repeater supply
7		--	n.c.
8	I/O	RS485-	receive/transmit data-negative
9		0V	0 V

Fig. 5-68: Signal pin configuration of the connector

Shield Connection Via D-subminiature screws and metallized connector housing.

Courtesy of CMA/Flodyne/Hydradyne ▪ Motion Control ▪ Hydraulic ▪ Pneumatic ▪ Electrical ▪ Mechanical ▪ (800) 426-5480 ▪ www.cmafh.com

Signal Specification

Signal	Specification
+5V repeater supply	+5 V (±10%) max. 75 mA
repeater control signal	TTL compatible 1: transmit 0: receive output resistance: 350R $V_{OL} \leq 0.8$ V at $I_{OL} \leq 2$ mA $V_{OH} \geq 3.5$ V at $I_{OH} \leq 1$ mA
receive/transmit data	EIA-RS485 standard

Fig. 5-69: Signal specification

CAUTION

Danger of destroying output "+5V Repeater supply" by overload!

⇒ do not short-circuit

⇒ do not exceed maximum current

Diagnostic Displays H30 – H33

For the meaning of the diagnostic displays please see the Functional Description of the respective firmware.

Courtesy of CMA/Flodyne/Hydradyne ▪ Motion Control ▪ Hydraulic ▪ Pneumatic ▪ Electrical ▪ Mechanical ▪ (800) 426-5480 ▪ www.cmafh.com

Bus Connectors

The PROFIBUS connectors each have a connectable terminating resistor. The terminating resistor must always be active at both the first and last bus node. Carry out the connection as shown in the figures below.

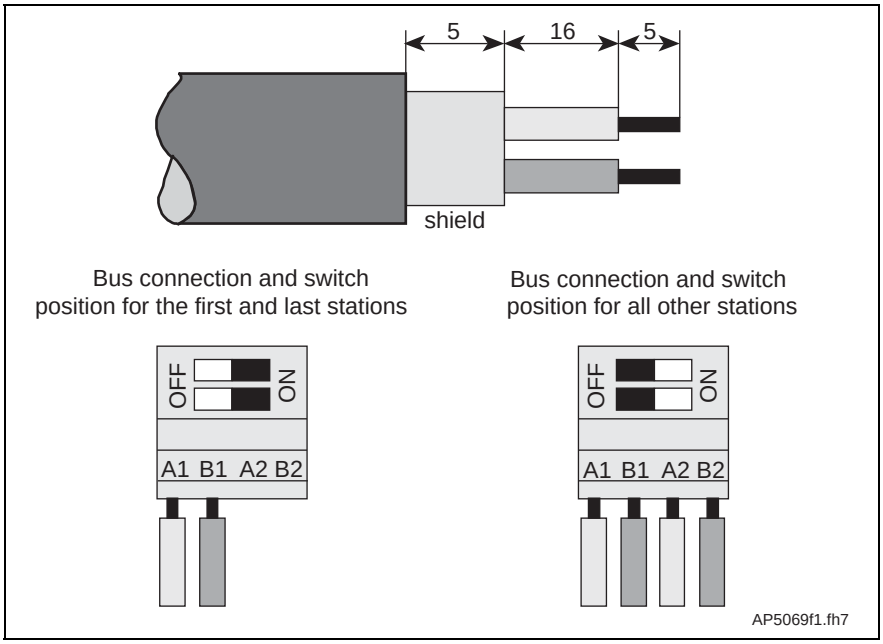

Fig. 5-70: Preparing a cable for connecting a bus connector

Courtesy of CMA/Flodyne/Hydradyne ▪ Motion Control ▪ Hydraulic ▪ Pneumatic ▪ Electrical ▪ Mechanical ▪ (800) 426-5480 ▪ www.cmafh.com

To prepare a bus cable, proceed as follows:

- use cable according to DIN EN50170 / 2 edition 1996
- strip cable (see previous illustration)
- insert both cores into screw terminal block

Note: Do not interchange the cores for A and B.

- press cable sheath between both clamps
- screw both cores into screw terminals

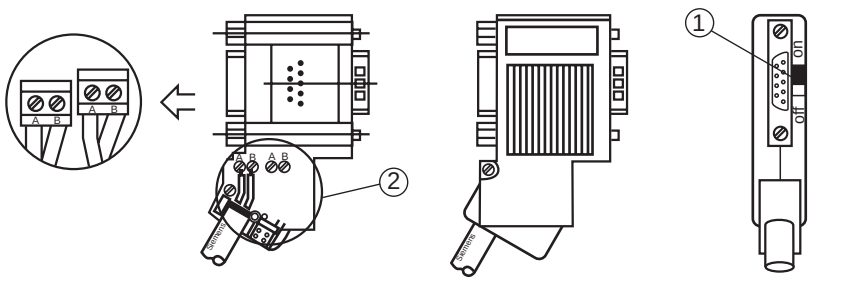

① Switch connection for the first and final slave in the Profibus-DP
② The cable shield must be placed bare on the metal guide

Ap5074f1.fh7

Fig. 5-71: Bus connection for the first and last slave, bus connector with 9-pin D-SUB socket, INS 0541

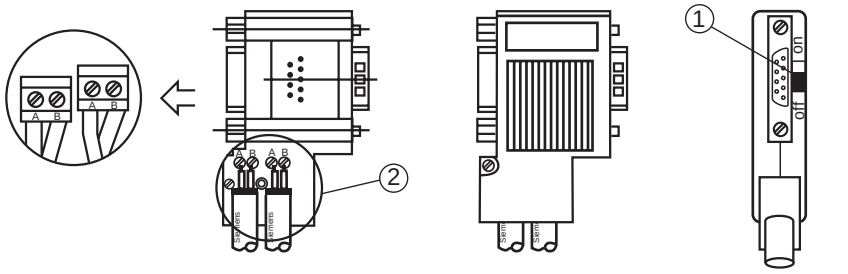

① Terminating resistor is off
② The cable shield must be placed bare on the metal guide

Ap5075f1.fh7

Fig. 5-72: Bus connection for all other slaves, bus connector with 9-pin D-SUB socket, INS 0541

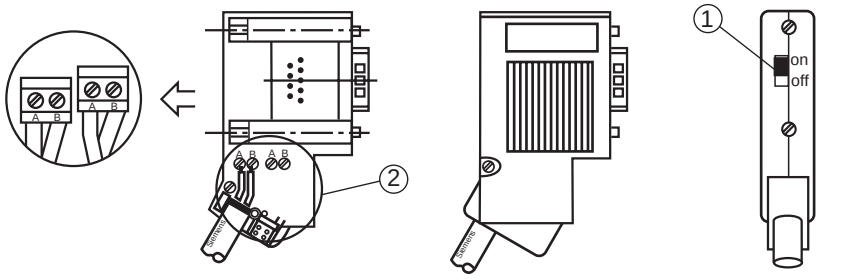

① Switch connection for the first and final slave in the Profibus-DP
② The cable shield must be placed bare on the metal guide

Ap5076f1.fh7

Fig. 5-73: Bus connection for the first and last slave without 9-pin D-SUB socket, INS 0540

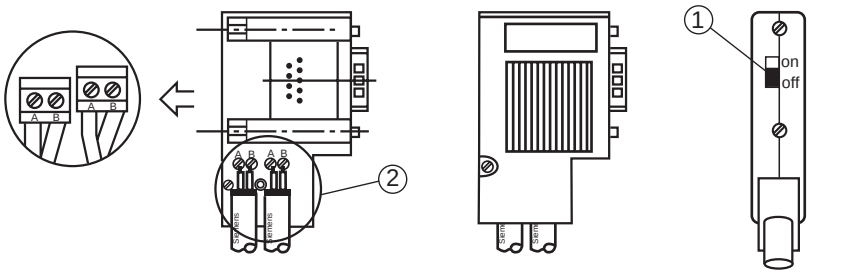

① Terminating resistor is off
② The cable shield must be placed bare on the metal guide

Ap5077f1.fh7

Fig. 5-74: Bus connection for all other slaves without 9-pin D-SUB socket, INS 0540

Connect the drive controller to a control unit using a shielded two-wire conductor in accordance with DIN 19245/ section 1.

Courtesy of CMA/Flodyne/Hydradyne ▪ Motion Control ▪ Hydraulic ▪ Pneumatic ▪ Electrical ▪ Mechanical ▪ (800) 426-5480 ▪ www.cmafh.com

Courtesy of CMA/Flodyne/Hydradyne ▪ Motion Control ▪ Hydraulic ▪ Pneumatic ▪ Electrical ▪ Mechanical ▪ (800) 426-5480 ▪ www.cmafh.com

DKC06.3 – DeviceNet Interface with COMBICON Connector

Note: How to proceed when replacing a master communication module: see page 5-47.

Master Communication Card

ECM01.1-DN01

View of Interface to Master Communication

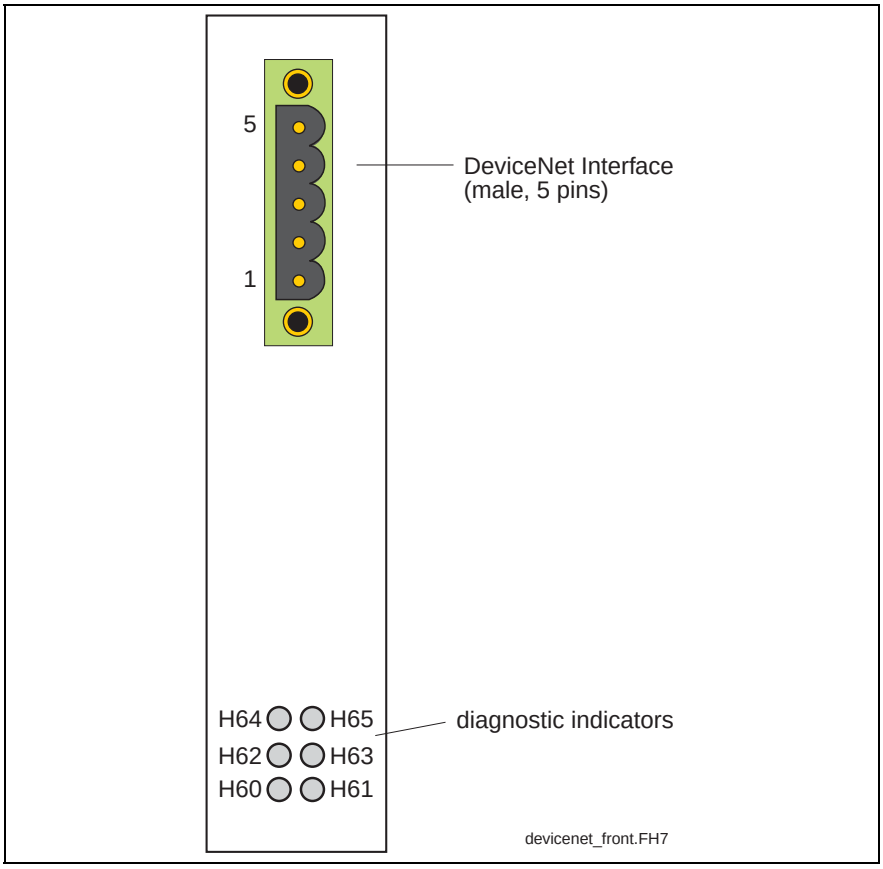

Fig. 5-75: View of interface to master communication

Technical Data of the Terminal Connector

Design

Type	Number of poles	Type of design
COMBICON	5	sockets on connector

Fig. 5-76: Design

Connection Cross Section

Cross section single-core [mm²]	Cross section multi-core [mm²]	Cross section in AWG gauge No.
0.2-2.5	0.2-1.5	24-16

Fig. 5-77: Connection cross section

Courtesy of CMA/Flodyne/Hydradyne ▪ Motion Control ▪ Hydraulic ▪ Pneumatic ▪ Electrical ▪ Mechanical ▪ (800) 426-5480 ▪ www.cmafh.com

Connection Diagram for DeviceNet Interface

DeviceNet Interface Connection

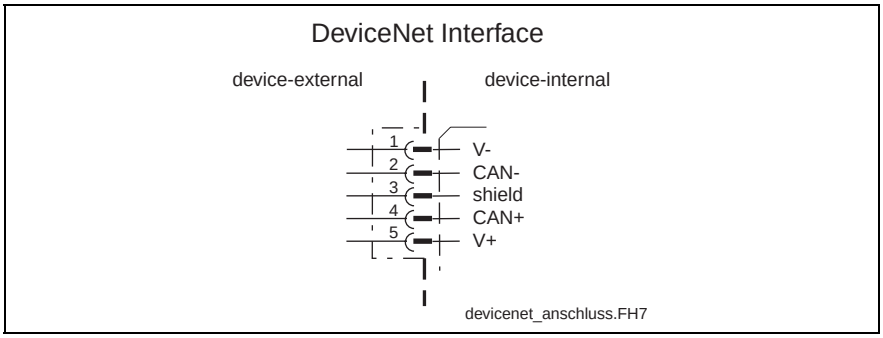

Fig. 5-78: Connection

Compatibility of the Interface

as per DeviceNet specification 2.0 Vol. 1
Open Screw Connector

Recommended Cable Type

as per DeviceNet specification 2.0 Vol. 1, appendix B

Connections of the Bus Nodes

as per DeviceNet specification 2.0 Vol. 1, appendix B
terminating resistor: 121 Ohm, 1%, ¼ W

Baud Rate and Cable Length

as per DeviceNet specification 2.0 Vol. 1

Pin Configuration of the Plug-In Connector

Pin	Definition	
1	V-	0 V
2	CAN-	differential signal
3	shield	shield connection
4	CAN+	differential signal
5	V+	interface supply

Fig. 5-79: Assignment of the interface signals

Maximum Bus Voltage

+30 V

Current Consumption on the Bus

Bus voltage	Current consumption
11 V	70 mA
18 V	45 mA
24 V	35 mA
32 V	28 mA

Fig. 5-80: Current consumption via bus connector

Diagnostic Displays H60 – H65

For the definition of the diagnostic displays please see the Functional Description of the respective firmware.

Courtesy of CMA/Flodyne/Hydradyne ▪ Motion Control ▪ Hydraulic ▪ Pneumatic ▪ Electrical ▪ Mechanical ▪ (800) 426-5480 ▪ www.cmafh.com

DKC16.3 – DeviceNet Interface with Sealed Micro-Style Connector

Note: How to proceed when replacing a master communication module: see page 5-47.

Master Communication Card

ECM01.1-DN02

View of Interface to Master Communication

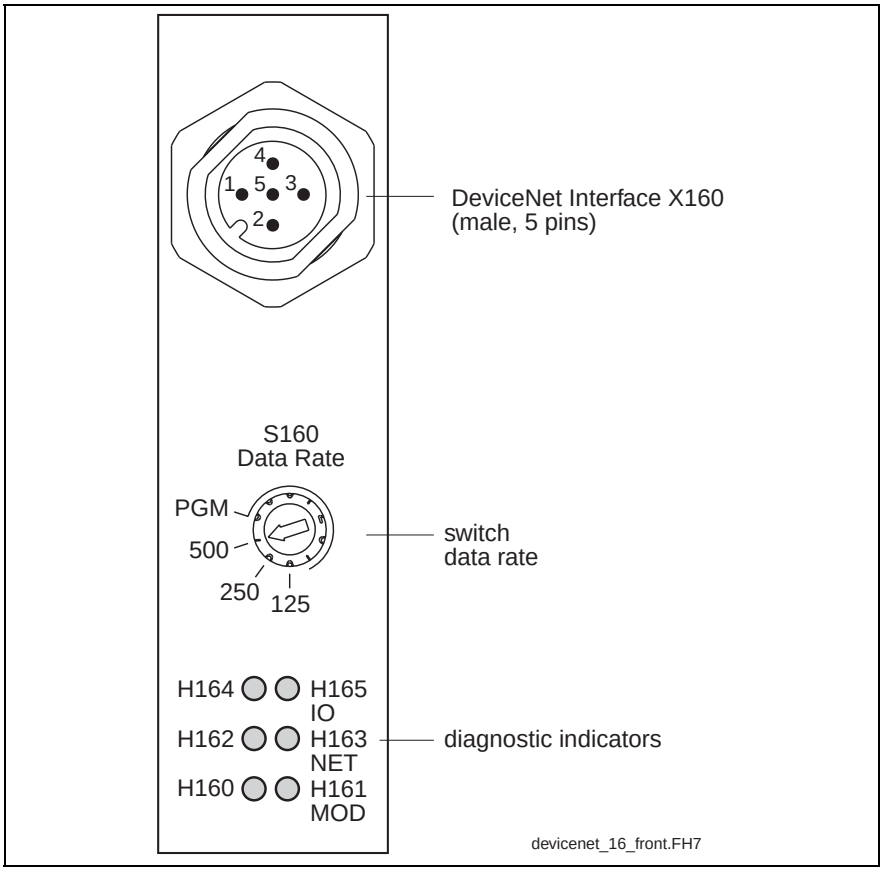

Fig. 5-81: View of interface to master communication

Technical Data of the Terminal Connector

Design

Type	Number of poles	Type of design
sealed micro-style	5	pins on unit

Fig. 5-82: Design

Connection Cross Section

Cross section single-core [mm²]	Cross section multi-core [mm²]	Cross section in AWG gauge No.
0.2-2.5	0.2-1.5	24-16

Fig. 5-83: Connection cross section

Courtesy of CMA/Flodyne/Hydradyne ▪ Motion Control ▪ Hydraulic ▪ Pneumatic ▪ Electrical ▪ Mechanical ▪ (800) 426-5480 ▪ www.cmafh.com

Connection Diagram for DeviceNet Interface

DeviceNet Interface Connection

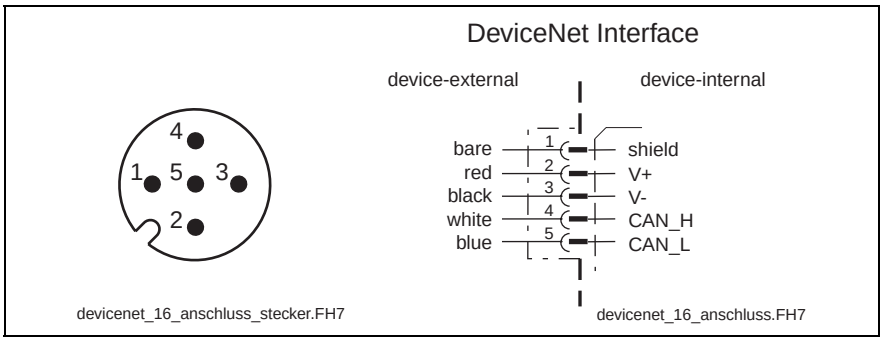

Fig. 5-84: Connection

Compatibility of the Interface

as per DeviceNet specification 2.0 Vol. 1
sealed micro-style connector

Recommended Cable Type

as per DeviceNet specification 2.0 Vol. 1, appendix B

Connections of the Bus Nodes

as per DeviceNet specification 2.0 Vol. 1, appendix B
terminating resistor: 121 Ohm, 1%, ¼ W

Baud Rate and Cable Length

as per DeviceNet specification 2.0 Vol. 1

Pin Configuration of the Plug-In Connector

Pin	Definition	
1	shield	shield connection
2	V+	interface supply
3	V-	0 V
4	CAN_H	differential signal
5	CAN_L	differential signal

Fig. 5-85: Assignment of the interface signals

Maximum Bus Voltage

+30 V

Current Consumption on the Bus

Bus voltage	Current consumption
11 V	70 mA
18 V	45 mA
24 V	35 mA
32 V	28 mA

Fig. 5-86: Current consumption via bus connector

Diagnostic Displays H160 – H165

For the definition of the diagnostic displays please see the Functional Description of the respective firmware.

Courtesy of CMA/Flodyne/Hydradyne ▪ Motion Control ▪ Hydraulic ▪ Pneumatic ▪ Electrical ▪ Mechanical ▪ (800) 426-5480 ▪ www.cmafh.com

DKC05.3 – CANopen Interface

Note: How to proceed when replacing a master communication module: see page 5-47.

Master Communication Card

ECM01.1-CN01

View of Interface to Master Communication

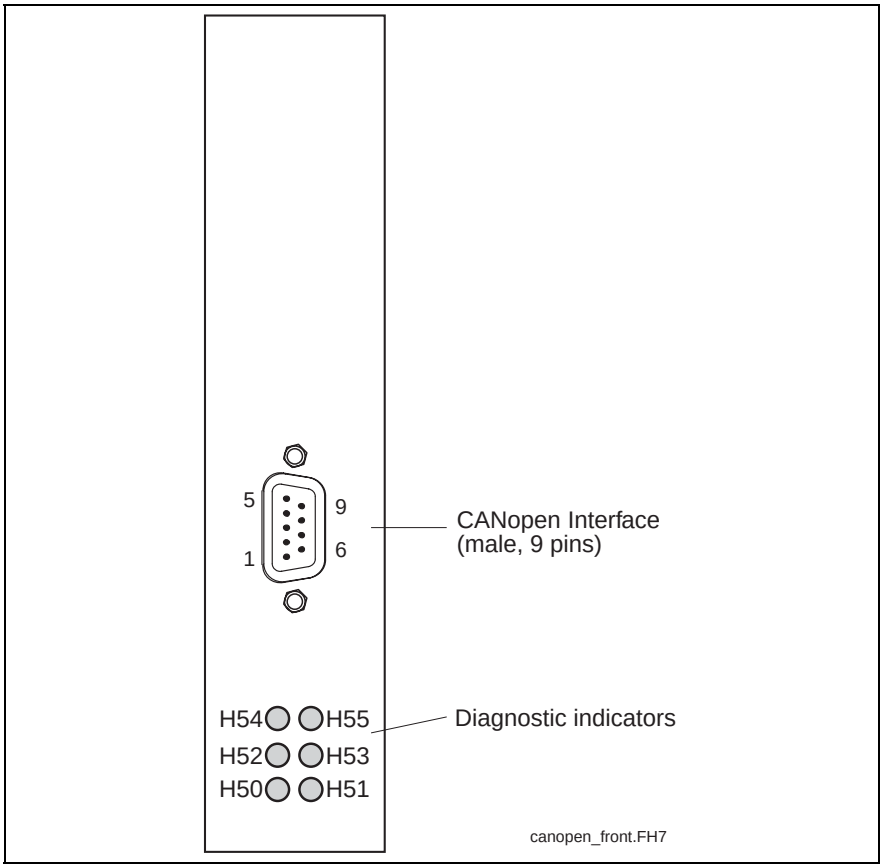

Fig. 5-87: View of interface to master communication

Technical Data of the Terminal Connector

Design

Type	Number of poles	Type of design
D-SUB	9	pins on device

Fig. 5-88: Design

Connection Cross Section

Cross section single-core [mm²]	Cross section multi-core [mm²]	Cross section in AWG gauge No.
--	0.08-0.5	--

Fig. 5-89: Connection cross section

Courtesy of CMA/Flodyne/Hydradyne ▪ Motion Control ▪ Hydraulic ▪ Pneumatic ▪ Electrical ▪ Mechanical ▪ (800) 426-5480 ▪ www.cmafh.com

Connection Diagram for CANopen Interface

CANopen Interface Connection

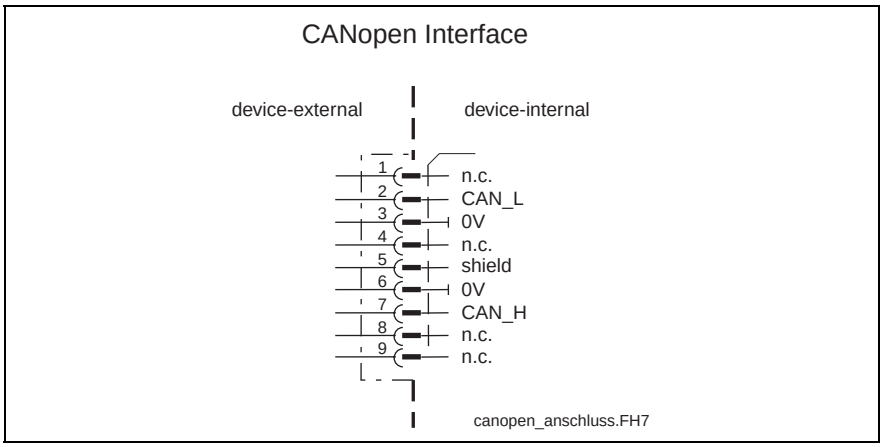

Fig. 5-90: Connection

Compatibility of the Interface

as per ISO 11 898

Recommended Cable Type

as per ISO 11 898

Pin Configuration of the X50 Plug-In Connector

Pin	Definition	
1	n.c.	n.c.
2	CAN_L	differential signal
3	0V	Gnd
4	n.c.	n.c.
5	shield	shield connection
6	0V	0V
7	CAN_H	differential signal
8	n.c.	n.c.
9	n.c.	n.c.

Fig. 5-91: Assignment of the interface signals

Shield Connection

Via D-subminiature screws and metallized connector housing.

Diagnostic Displays H50 – H55

For the definition of the diagnostic displays please see the Functional Description of the respective firmware.

Courtesy of CMA/Flodyne/Hydradyne ▪ Motion Control ▪ Hydraulic ▪ Pneumatic ▪ Electrical ▪ Mechanical ▪ (800) 426-5480 ▪ www.cmafh.com

5.3 Mounting a Master Communication Module

CAUTION

Possible damage to the master communication module due to ESD!

⇒ Put on an earthing clip.

Removing the Shipping Brace

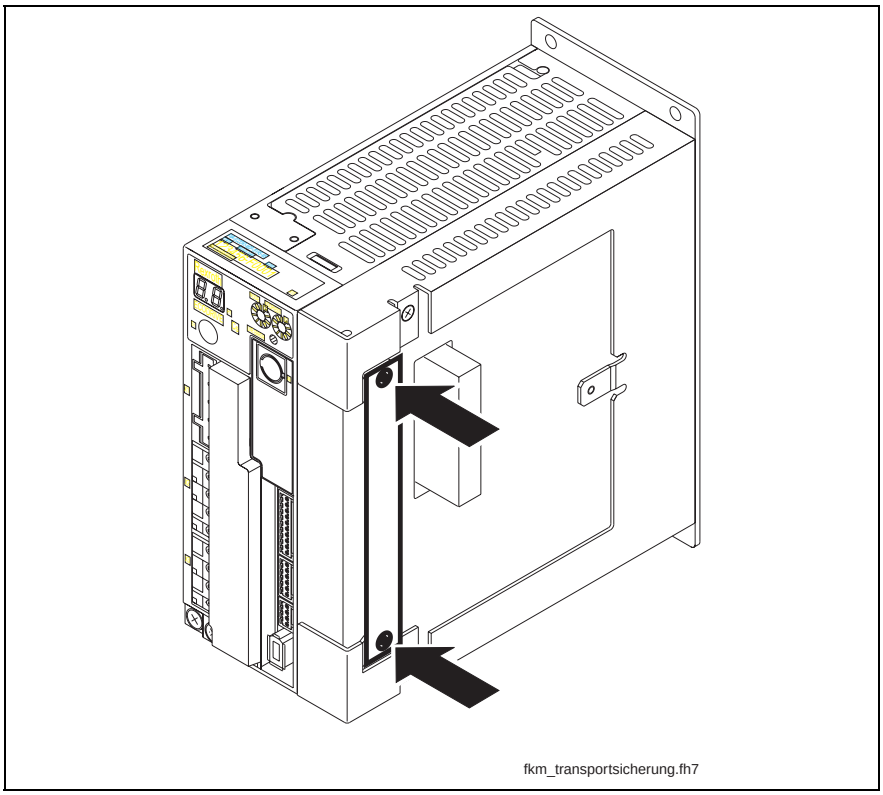

1. Unscrew two screws of the shipping brace at the drive controller.
2. Remove the shipping brace.

Courtesy of CMA/Flodyne/Hydradyne ▪ Motion Control ▪ Hydraulic ▪ Pneumatic ▪ Electrical ▪ Mechanical ▪ (800) 426-5480 ▪ www.cmafh.com

Inserting the Master Communication Module

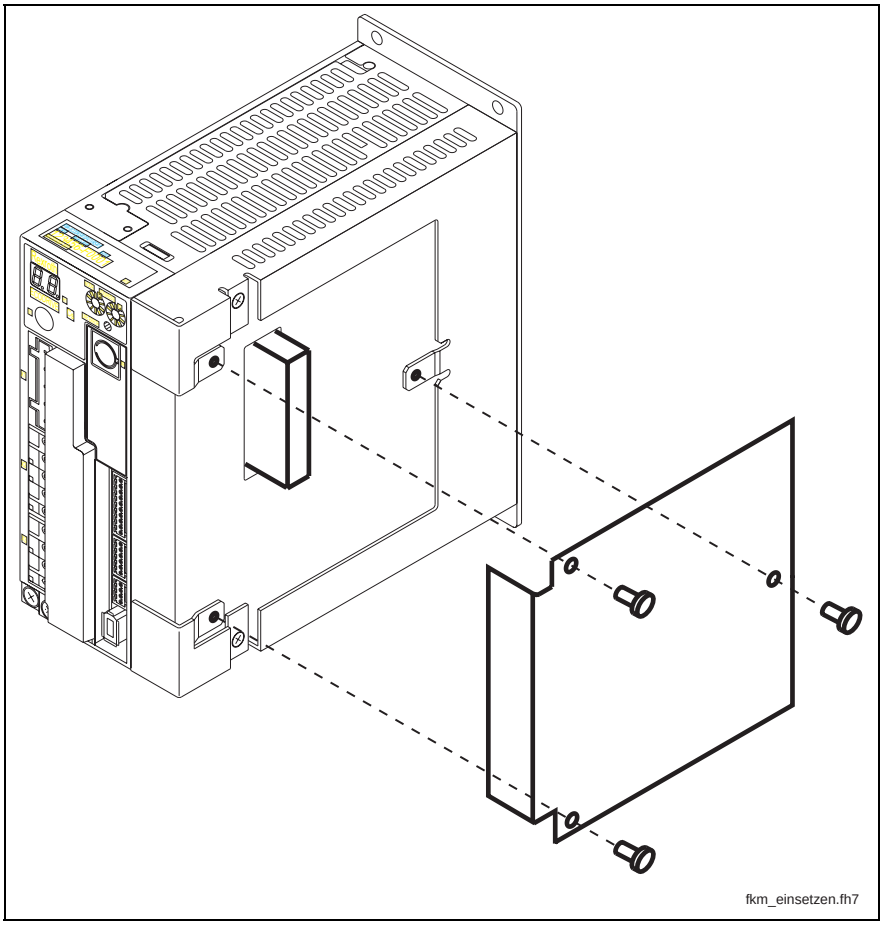

1. Carefully plug on master communication module at the drive controller.
2. Tighten three screws of the master communication module at the drive controller.

Courtesy of CMA/Flodyne/Hydradyne ▪ Motion Control ▪ Hydraulic ▪ Pneumatic ▪ Electrical ▪ Mechanical ▪ (800) 426-5480 ▪ www.cmafh.com

5.4 Replacing a Master Communication Module

CAUTION

Possible damage to the master communication module due to ESD!

⇒ Put on an earthing clip.

1. Unscrew three screws of the master communication module at the drive controller:

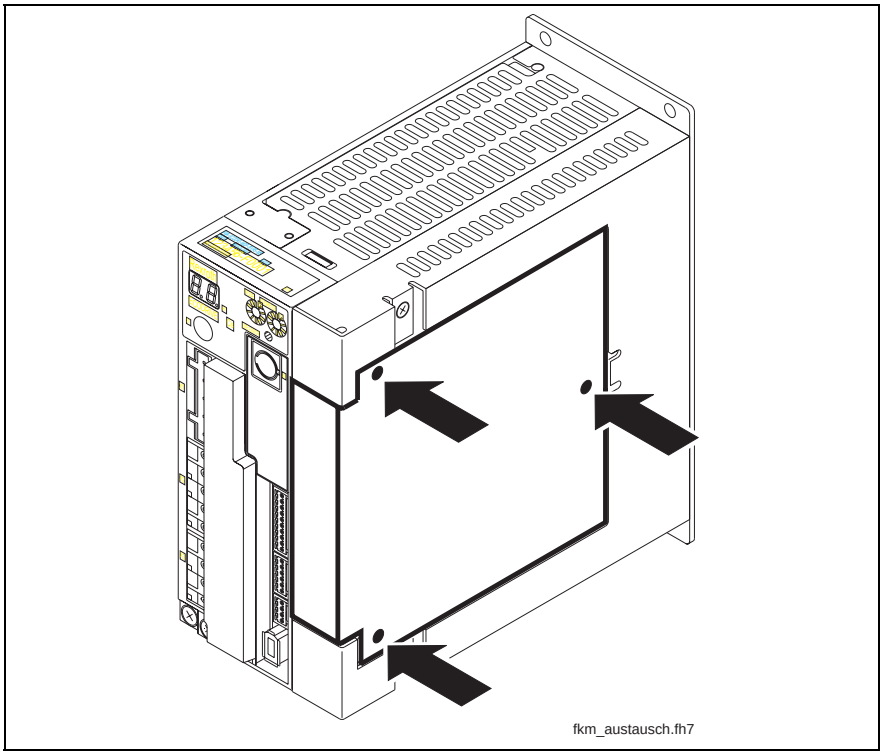

Fig. 5-92: Screws of the master communication module

2. Draw off master communication module sidewards from the drive controller.
3. Plug on new master communication module at the drive controller.
4. Tighten three screws of the master communication module at the drive controller.

Courtesy of CMA/Flodyne/Hydradyne ▪ Motion Control ▪ Hydraulic ▪ Pneumatic ▪ Electrical ▪ Mechanical ▪ (800) 426-5480 ▪ www.cmafh.com

Notes

Courtesy of CMA/Flodyne/Hydradyne ▪ Motion Control ▪ Hydraulic ▪ Pneumatic ▪ Electrical ▪ Mechanical ▪ (800) 426-5480 ▪ www.cmafh.com

6 Mains and Supply Voltage Connection

DANGER

Lethal electric shock caused by live parts with more than 50 V!

⇒ Before starting to work on the drive controller switch off the voltage supply via the main switch or the circuit breaker.

⇒ Always mount or dismount both connectors (motor connection and mains connection) at the drive controller.

⇒ Observe the notes in the "Safety Instructions for Electric Drives and Controls" chapter.

Contents of the Chapter:

- connection features
- kinds of connection (single-phase, three-phase)
- inrush current and mains phase current
- selecting Q1 fuse and K1 contactor
- mains filter
- operation on 400/480 V mains
- ground conditions of the power supply network
- fusing via earth-leakage circuit breaker
- control circuits for the mains connection

Courtesy of CMA/Flodyne/Hydradyne ▪ Motion Control ▪ Hydraulic ▪ Pneumatic ▪ Electrical ▪ Mechanical ▪ (800) 426-5480 ▪ www.cmafh.com

6.1 Connection Features

- Rexroth EcoDrive Cs drive controllers must be permanently connected to the power supply network.
- Single-phase and three-phase connection possible
- Mains and supply voltage connection have to be done via individual cables.
- It is impossible to interconnect the DC buses and group or central supply is therefore impossible!
- The control voltage (24 V) is generated internally. For control voltage supply 230 V are connected externally.
- Connection by means of WAGO terminal blocks

Courtesy of CMA/Flodyne/Hydradyne ▪ Motion Control ▪ Hydraulic ▪ Pneumatic ▪ Electrical ▪ Mechanical ▪ (800) 426-5480 ▪ www.cmafh.com

6.2 Kinds of Connection

- Three-phase connection at **3 x 240 V**
- Single-phase connection at **1 x 240 V**

Note: When operating the drive controllers on mains with **3 x 400 V**, it is necessary to use transformers.

Note: DKC**.3-018 drive controllers are designed for a three-phase mains connection. Single-phase operation considerably reduces the service life of the drive controllers and causes derating (see chapter Derating on page 4-12).

Single-Phase Connection

CAUTION

Danger of destroying the drive controller!

⇒ Do not connect the drive controller directly to **mains voltages higher than 240 V**! In the case of higher mains voltages, the connection must be realized via a **transformer**.

Mains Voltage Range **1 x AC min. 200 V -15% (→ 170 V) ... max. 240 V +10% (→ 264 V)**

Connection to Drive Controller

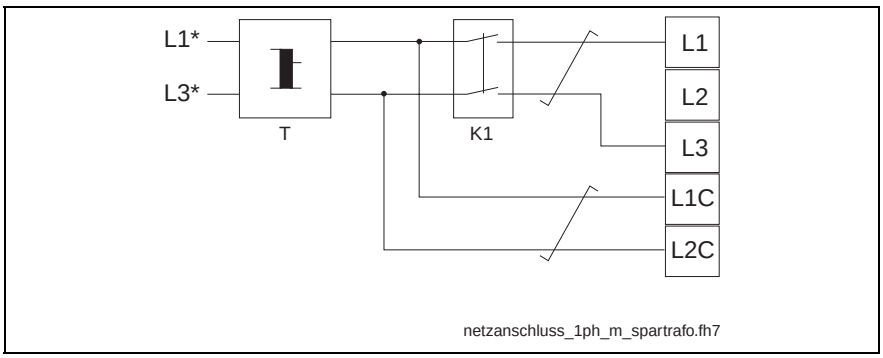

L1*, L3*: mains
T: autotransformer (only necessary when mains input voltage is higher than 240 V)
K1: magnetic contactor
L1, L3: mains terminal connectors; twisted wires
L1C, L2C: control voltage terminal connectors; twisted wires

Fig. 6-1: Single-phase mains connection

Note: If a neutral N is present in the control cabinet, you possibly do not need a transformer.

Courtesy of CMA/Flodyne/Hydradyne ▪ Motion Control ▪ Hydraulic ▪ Pneumatic ▪ Electrical ▪ Mechanical ▪ (800) 426-5480 ▪ www.cmafh.com

Connection Cross Section

Connection	Cross section [mm²]	Cross section in AWG gauge No.
L1, L3	0.75 - 2	18 - 14
L1C, L2C	0.75	18

Fig. 6-2: Connection Cross Section

Note: Strong mechanical influence on the test tap of the terminal connectors can increase the transition resistance and destroy the terminal connectors.

Three-Phase Connection

CAUTION

Danger of destroying the drive controller!

⇒ Do not connect the drive controller directly to **mains voltages higher than 240 V**! In the case of higher mains voltages, the connection must be realized via a **transformer**.

Mains Voltage Range **3 x AC min. 200 V -15% (→ 170 V) ... max. 240 V +10% (→ 264 V)**

Connection to Drive Controller

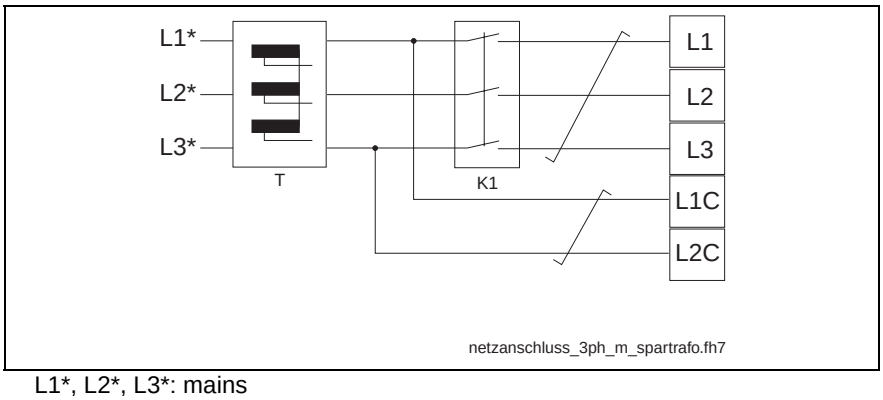

L1*, L2*, L3*: mains
T: autotransformer (only necessary when mains input voltage is higher than 240 V)
K1: magnetic contactor
L1, L2, L3: mains terminal connectors; twisted wires
L1C, L2C: control voltage terminal connectors; twisted wires

Fig. 6-3: Three-phase mains connection

Connection Cross Section

Connection	Cross section [mm²]	Cross section in AWG gauge No.
L1, L2, L3	0.75 - 2	18 - 14
L1C, L2C	0.75	18

Fig. 6-4: Connection Cross Section

Note: Strong mechanical influence on the test tap of the terminal connectors can increase the transition resistance and destroy the terminal connectors.

Courtesy of CMA/Flodyne/Hydradyne ▪ Motion Control ▪ Hydraulic ▪ Pneumatic ▪ Electrical ▪ Mechanical ▪ (800) 426-5480 ▪ www.cmafh.com

6.3 Inrush Current and Mains Phase Current

Characteristic of Inrush Current

Note: For n parallel-switched inputs the current inrush is n-fold.

DKC**.3-004 (100 W)

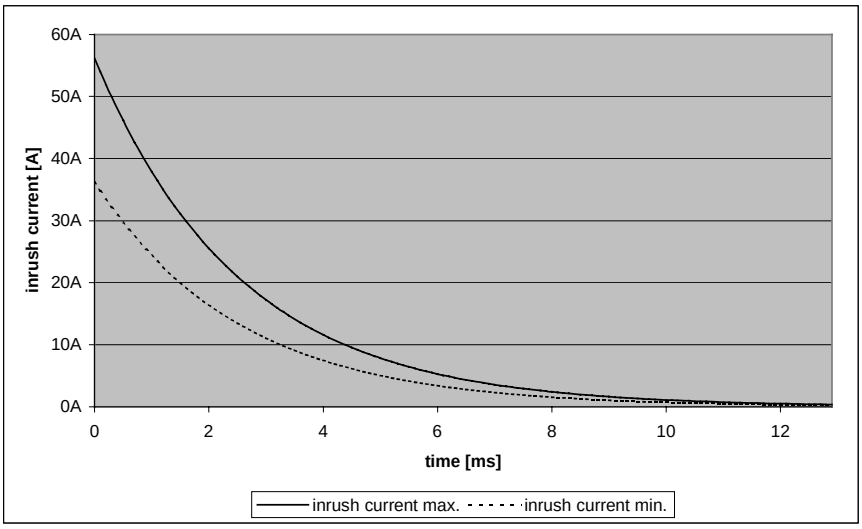

Fig. 6-5: Inrush current characteristic of DKC**.3-004 (100 W)

DKC**.3-008 (200 W), DKC**.3-012 (400 W), DKC**.3-018 (750 W)

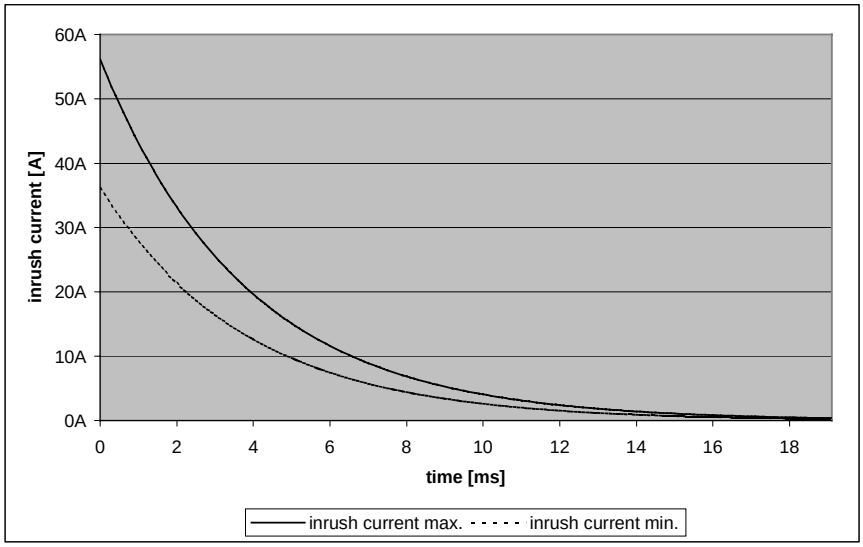

Fig. 6-6: Inrush current characteristic of DKC**.3-008 (200 W), DKC**.3-012 (400 W), DKC**.3-018 (750 W)

Courtesy of CMA/Flodyne/Hydradyne ▪ Motion Control ▪ Hydraulic ▪ Pneumatic ▪ Electrical ▪ Mechanical ▪ (800) 426-5480 ▪ www.cmafh.com

Inrush Current Impulse

Computing Inrush Current Impulse

When the power supply (mains voltage) is switched on, the DC bus capacitors are first charged via the softstart resistance. This causes a current impulse when switching on that falls off at increasing DC bus voltage.

$$I_{Ein} = \frac{U_{N1} * \sqrt{2}}{R_{Softstart}}$$

$$\sum I_{Ein} = I_{EinGesamt}$$

I_{Ein}: inrush current of unit in A
$I_{EinGesamt}$: total inrush current in A (value relevant for fusing)
U_{N1}: mains input voltage
$R_{Softstart}$: softstart resistance of unit (see relevant technical data)

Fig. 6-7: Computing inrush current

Note: To compute the inrush current take all the units connected to the mains voltage into account.

Numerical example

4 DKC02.3-W0012 drive controllers are connected to a mains connection.

$R_{Softstart}$ = 4.7 Ohm (see technical data)

U_{N1} = 264 V (max. allowed mains input voltage)

I_{EIN} = 79.4 A

→ total inrush current: $I_{EinGesamt}$ = 317.6 A

Note: This inrush current, however, is only of short duration, because the time constant of the RC element with $T = R_{Softstart} \times C_{Zwischenkreis}$ is within a range of milliseconds (T = 2...4 ms)!

Reducing inrush current

For 100 W, 200 W, and 400 W drive controllers: To reduce the inrush current you can connect our accessories **SUP-E05-DKC*CS-SURGEP** to the drive controller at terminal X2 (see chapter 10, page 10-18). This accessories contains an NTC thermistor (33 Ohm at 25 °C; 19.6 Ohm at 40 °C) to reduce the inrush current.

CAUTION

Risk of damage by heat!

⇒ **400 W drive controllers** (DKCxx.x-012) that are operated with SUP-E05-DKC*CS-SURGEP may **only** be operated **with a maximum power of 70%**. With higher load the NTC thermistor gets too hot.

Note: For 750 W drive controllers the SUP-E05-DKC*CS-SURGEP is not suitable.

Courtesy of CMA/Flodyne/Hydradyne ▪ Motion Control ▪ Hydraulic ▪ Pneumatic ▪ Electrical ▪ Mechanical ▪ (800) 426-5480 ▪ www.cmafh.com

Numerical examples

4 DKC02.3-W0012 drive controllers are connected to a mains connection.

Ambient temperature = 25 °C:

- $R = R_{Softstart} + R_{NTC}$ = 4.7 Ohm + 33 Ohm = 37.7 Ohm
- U_{N1} = 264 V (max. allowed mains input voltage)
- I_{EIN} = 9.9 A (for a single drive controller)

→ total inrush current: $I_{EinGesamt}$ = 39.6 A

Ambient temperature = 40 °C:

- $R = R_{Softstart} + R_{NTC}$ = 4.7 Ohm + 19.6 Ohm = 24.3 Ohm
- U_{N1} = 264 V (max. allowed mains input voltage)
- I_{EIN} = 15.4 A (for a single drive controller)

→ total inrush current: $I_{EinGesamt}$ = 61.5 A

Courtesy of CMA/Flodyne/Hydradyne ▪ Motion Control ▪ Hydraulic ▪ Pneumatic ▪ Electrical ▪ Mechanical ▪ (800) 426-5480 ▪ www.cmafh.com

Curve of Inrush Current with Single-Phase Operation

According to the kind of connection (single-phase or three-phase), the inrush current is of different intensity. The figure below illustrate the test setup and the basic time flow of the inrush current.

Note: As the curve of the inrush current is not sinusoidal, make sure you have the appropriate measuring devices when measuring the current!

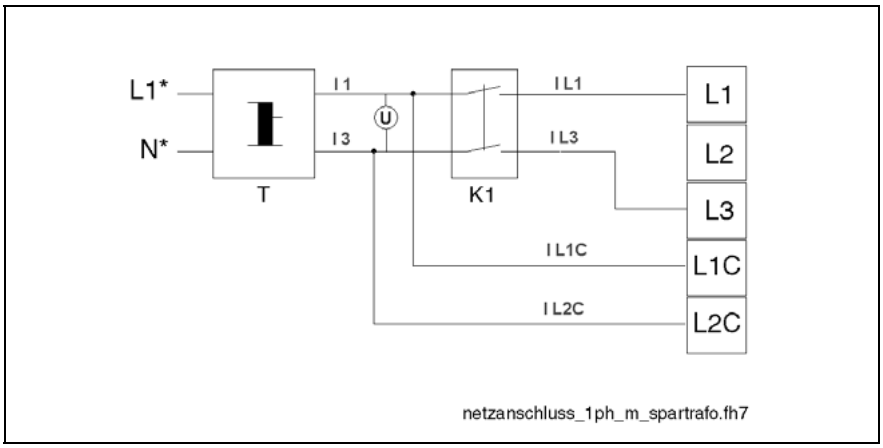

Fig. 6-8: Test setup for voltage measurement with single-phase connection (U = 230 V)

The measurements below illustrate the basic curve of the inrush current with completely discharged DC bus when switching on the mains voltage.

I L1C when switching on control voltage

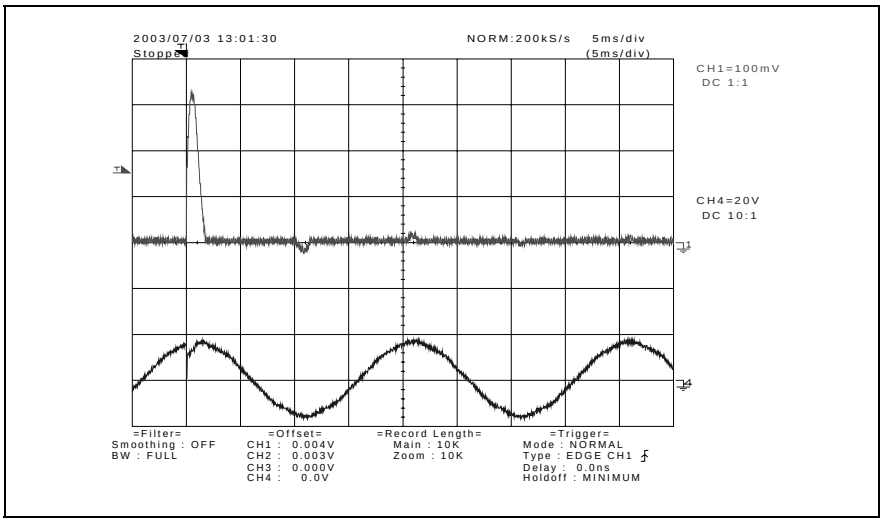

Fig. 6-9: I L1C (upper curve) and mains voltage or transformer output (lower curve) when switching on (time basis: T = 5 ms/div)

I L1 when switching on mains voltage

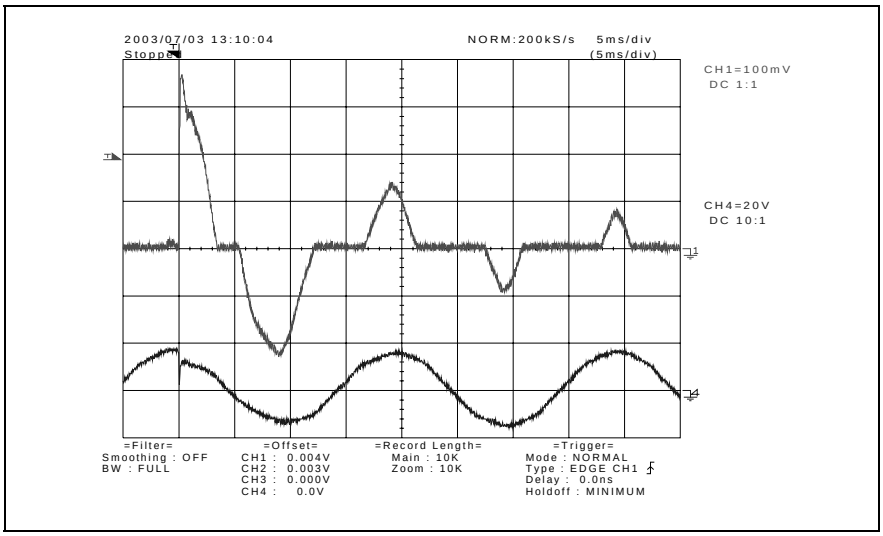

Fig. 6-10: I L1 (upper curve) and mains voltage or transformer output (lower curve) when switching on (time basis: T = 5 ms/div)

Courtesy of CMA/Flodyne/Hydradyne ▪ Motion Control ▪ Hydraulic ▪ Pneumatic ▪ Electrical ▪ Mechanical ▪ (800) 426-5480 ▪ www.cmafh.com

Courtesy of CMA/Flodyne/Hydradyne ▪ Motion Control ▪ Hydraulic ▪ Pneumatic ▪ Electrical ▪ Mechanical ▪ (800) 426-5480 ▪ www.cmafh.com

Curve of Inrush Current with Three-Phase Operation

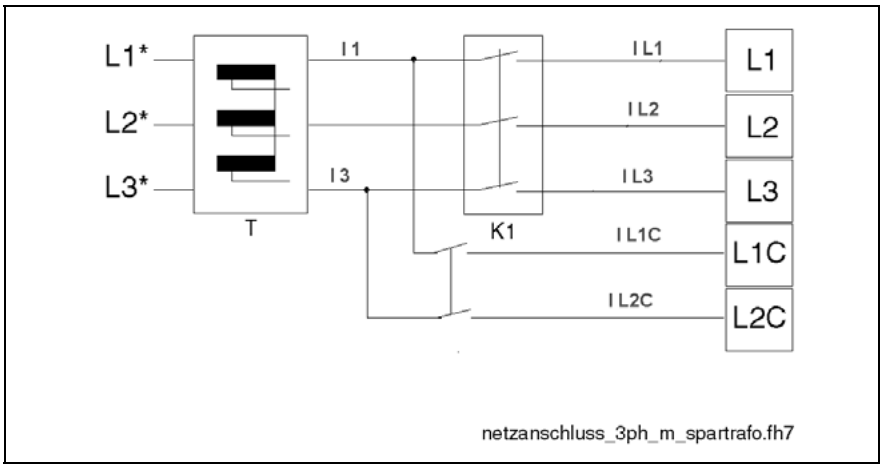

Fig. 6-11: Test setup for current measurement with three-phase connection (U = 3 x 230 V)

I L1C when switching on control voltage

Current consumption as with single-phase operation.

Inrush currents I L1, I L2, I L3 when switching on mains voltage

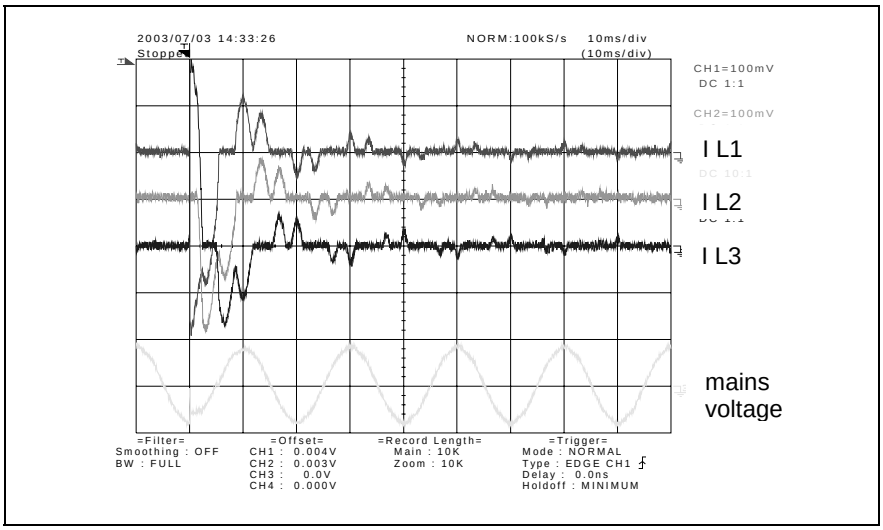

Fig. 6-12: Currents I L1, I L2, I L3 and mains voltage or transformer output when switching on (time basis: T = 10 ms/div)

Courtesy of CMA/Flodyne/Hydradyne ▪ Motion Control ▪ Hydraulic ▪ Pneumatic ▪ Electrical ▪ Mechanical ▪ (800) 426-5480 ▪ www.cmafh.com

Computing Phase Current on the Mains

To select a suitable mains contactor and fuses for the power connections it is necessary to first compute the phase current I_N at the mains.

The mains-side phase current $\mathbf{I}_{N1}$ is determined out of the mains connecting power $\mathbf{S}_{N1}$.

Selecting the mains connecting power in the list or compute it according to the following formula. With multiple controllers, add the individual powers.

The mains connecting power can be determined

- by selecting the mains connecting power in the list resp. the technical data

- or -

- by computing it according to the following formula.

Note: With multiple controllers, add the individual powers and, if necessary, take a coincidence factor into account, because often not all servo axes require full power simultaneously.

$$P_{ZWD} = \frac{M_{EFF} \cdot n_{MITTEL} \cdot 2 \cdot \pi}{60} \cdot k$$

P_{ZWD}: required DC bus continuous power in W
M_{EFF}: rms torque in Nm
n_{MITTEL}: mean speed in min-1
k: factor for motor and controller efficiency

Fig. 6-13: Computing DC bus power

$$S_{N1} = P_{ZWD} \cdot F$$

S_{N1}: connected load in VA
P_{ZWD}: DC bus continuous power in W
F: connected load factor due to the non-sinusoidal phase current

Fig. 6-14: Computing mains connected load

Single-phase load: $$I_{N1} = \frac{S_{N1}}{U_{N1}}$$

Three-phase load: $$I_{N1} = \frac{S_{N1}}{U_{N1} \cdot \sqrt{3}}$$

I_{N1}: mains-side phase current in A
S_{N1}: connected load in VA
U_{N1}: voltage between phases of the mains in V

Fig. 6-15: Computing mains-side phase current

Rexroth Bosch Group

Courtesy of CMA/Flodyne/Hydradyne ▪ Motion Control ▪ Hydraulic ▪ Pneumatic ▪ Electrical ▪ Mechanical ▪ (800) 426-5480 ▪ www.cmafh.com

Mains Connection with Phase Currents of More than 25 A

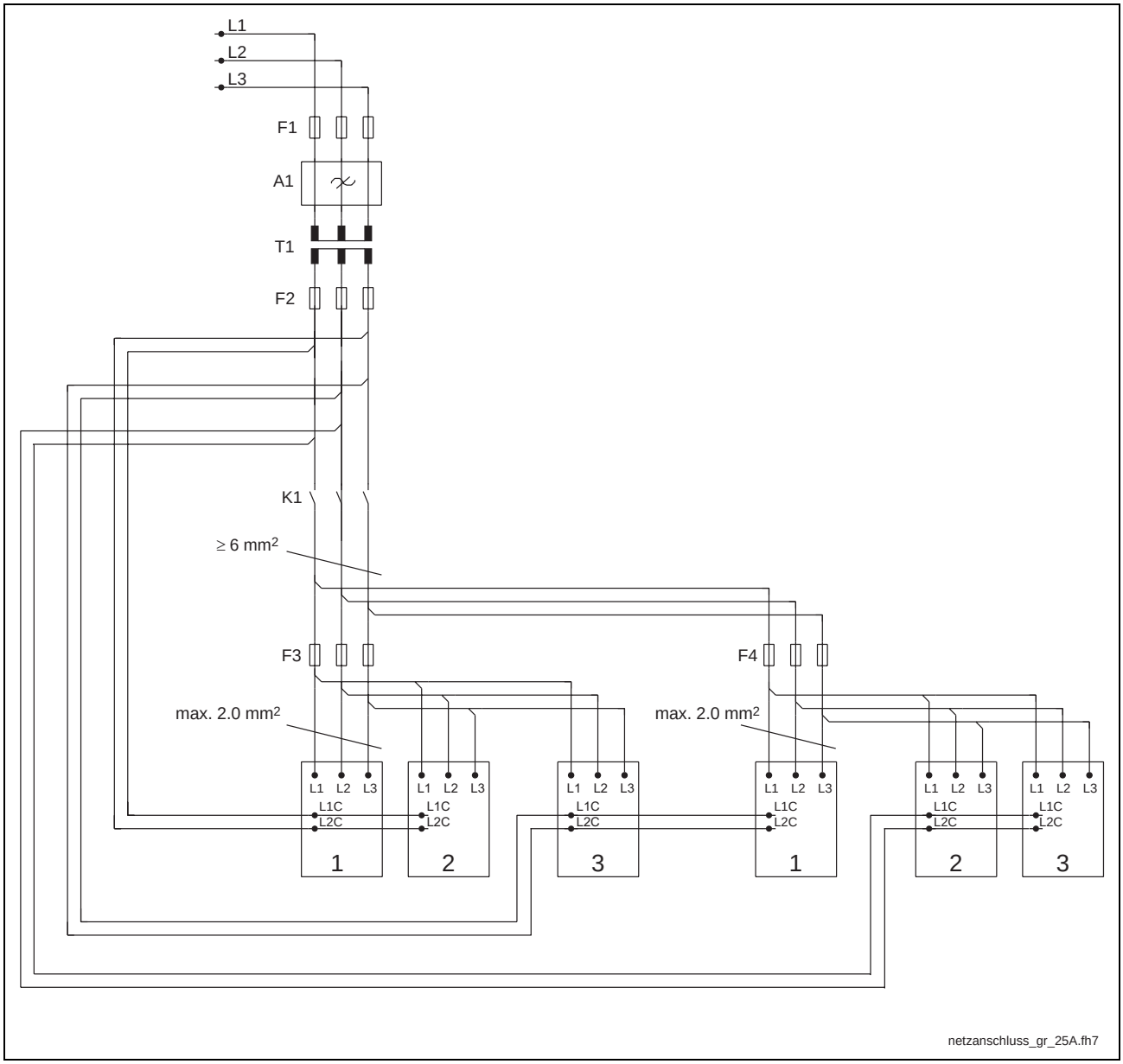

A1: mains filter
F1: fuse for transformer
F2: circuit breaker (max. 25 A)
F3, F4: fuse (max. 16 A when cross-section is 1.5 mm^2)
K1: mains contactor
T1: transformer

Fig. 6-16: Mains connection with phase currents of more than 25 A

Note: Distribute the control voltage connections symmetrical to the three phases (see figure above).

Note: For TN systems only:
If you use an autotransformer, connect the star point of the output side and the PE terminal of the autotransformer with a common earthing bar.

Courtesy of CMA/Flodyne/Hydradyne ▪ Motion Control ▪ Hydraulic ▪ Pneumatic ▪ Electrical ▪ Mechanical ▪ (800) 426-5480 ▪ www.cmafh.com

Mains Connection with Phase Currents of Less than 25 A

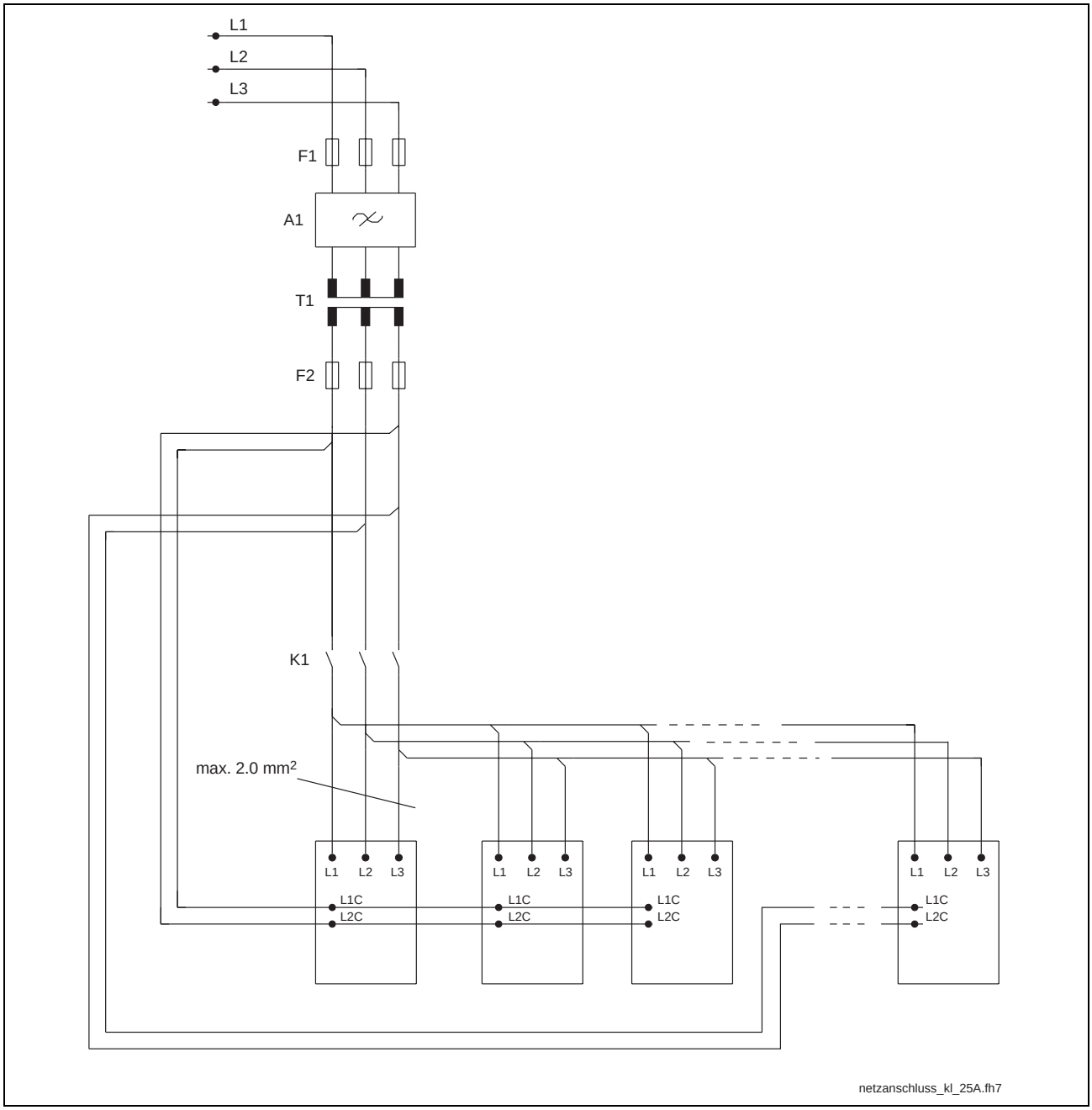

A1: mains filter
F1: fuse for transformer
F2: circuit breaker (max. 25 A)
K1: mains contactor
T1: transformer

Fig. 6-17: Mains connection with phase currents of less than 25 A

Note: Distribute the control voltage connections symmetrical to the three phases (see figure above).

Note: For TN systems only:
If you use an autotransformer, connect the star point of the output side and the PE terminal of the autotransformer with a common earthing bar.

Courtesy of CMA/Flodyne/Hydradyne ▪ Motion Control ▪ Hydraulic ▪ Pneumatic ▪ Electrical ▪ Mechanical ▪ (800) 426-5480 ▪ www.cmafh.com

6.4 Selecting Q1 Fuse and K1 Contactor

Notes

- Several controllers can be operated on a single fuse and mains contactor. The phase currents and inrush currents of the individual drives must then simply be added up.
- If a transformer is used, then the fuses and contactors must be installed on the primary side.
- When selecting the mains contactor (power circuit-breaker), observe the fuse characteristics to make sure that the relatively strong inrush current does not cause the fuse to respond.

With the known technical data of the devices and the above formulas there are the following values:

Connection	U_{Netz_max} [V]	P_{mech} [W]	η [%]	P_{DC} [W]	S_{N1} [VA]	I_{Ein} [A]	I_{N1} [A]	T [ms]
single-phase	264	100	61	140.3	400	79.2	1.5	2.54
	264	200	71	253.2	700	79.2	2.7	3.8
	264	400	83	457.1	1400	79.2	5.3	3.8
	264	750	90	796.2	2165	79.2	8.2	3.8
three-phase	264	100	61	140.3	400	79.2	0.9	2.54
	264	200	71	253.2	700	79.2	1.5	3.8
	264	400	83	457.1	1400	79.2	3.1	3.8
	264	750	90	796.2	2165	79.2	4.7	3.8

U_{Netz_max}: Maximum admissible mains input voltage
P_{mech}: Power at the driven shaft of the motor
η: Efficiency
P_{DC}: Continuous DC bus power
S_{N1}: Mains connection power
I_{Ein}: Inrush current
I_{N1}: Phase current of the mains
T: Time constant of RC element ($T = R_{Softstart} \times C_{Zwischenkreis}$)

Fig. 6-18: Overview of phase currents and inrush current peaks of the devices for single-phase and three-phase operation

Therefore, the following criteria have to be taken into account when selecting the mains contactor:

- **cable cross section of the supply feeders**
  The supply feeders of the drive controllers have to be fused by means of the circuit breakers. The maximum possible wire cross section at the terminal connector is 2.0 mm^2 (-> max. 16 A when cross-section is 1.5 mm^2).
- **mains current consumption at continuous operation in nominal working point**
  It must be possible for the mains-side phase current I_{N1} to be continuously flowing without the fuse triggering.
- **duration of maximum inrush current and device peak current**
  It must be possible for the inrush current I_{Ein} to flow at least for the time t = 5*T = 15 ms without the fuse triggering. Therefore use slow fuses!

Courtesy of CMA/Flodyne/Hydradyne ▪ Motion Control ▪ Hydraulic ▪ Pneumatic ▪ Electrical ▪ Mechanical ▪ (800) 426-5480 ▪ www.cmafh.com

6.5 Mains Filter

Note: Mains filters are available from Rexroth to comply with EMC-limits (see chapter 10 Additional Components).

When selecting the mains filter, the sum of the mains-side phase currents I_{Ein} of all drive controllers connected to the mains has to be taken into account.

Example 6 drive controllers of the DKC0x.3-W0008 (400 W) type are to be operated with a mains filter. The resulting total current is 6*5.3 A = 31.8 A. This means that the mains filter has to be dimensioned for at least 31.8 A_{eff} phase current.

Note: You can find detailed information in the project planning manual "Electromagnetic Compatibility (EMC) in Drive and Control Systems", doc.-type DOK-GENERL-EMV********-PRxx.

Rexroth Bosch Group

Courtesy of CMA/Flodyne/Hydradyne ▪ Motion Control ▪ Hydraulic ▪ Pneumatic ▪ Electrical ▪ Mechanical ▪ (800) 426-5480 ▪ www.cmafh.com

6.6 Operation on 400/480 V Mains

Basics

Operation on the mains with voltages above 240 V requires a mains transformer. This applies both to single-phase operation and to three-phase operation.

Note: There are often only the 3 phases (L1, L2, L3) available in the control cabinet so that the resulting voltage is 400 V (480 V) even with single-phase mains connection (L1, L2)!

Selecting the Mains Transformer

When selecting the mains transformer, the total mains connection power $\mathbf{S}_{N1}$ and the total phase current $\mathbf{I}_{N1}$ of all drive controllers to be supplied has to be taken into account (see table below).

Connection	P_{mech} [W]	η [%]	P_{DC} [W]	S_{N1} [VA]	Form factor F	I_{N1} [A]	I_{Ein} [A]
single-phase	100	61	140.3	400	2.436	1.5	78.6
	200	71	253.2	700	2.471	2.7	78.6
	400	83	457.1	1400	2.905	5.3	78.6
	750	90	796.2	2400	2.848	9.1	78.6
three-phase	100	61	140.3	400	2.436	0.9	78.6
	200	71	253.2	700	2.471	1.6	78.6
	400	83	457.1	1400	2.905	3.1	78.6
	750	90	796.2	2400	2.848	5.3	78.6

P_{mech}: Power at the driven shaft of the motor
η: Efficiency
P_{DC}: Continuous DC bus power
S_{N1}: Mains connection power
I_{Ein}: Inrush current
I_{N1}: Phase current of the mains
T: Time constant of RC element ($T = R_{Softstart} \times C_{Zwischenkreis}$)

Fig. 6-19: Overview of phase currents and inrush current peaks of the devices for single-phase and three-phase operation

Example 6 drive controllers of the DKC0x.3-W0008 (400 W) type are to be supplied in a three-phase way via a transformer. The resulting mains connection power is 6 x 1400 VA = 8400 VA. This means that a transformer of 8.4 kVA has to be used if all axes can load the mains simultaneously. As often not all axes require power at the same time, a respective coincidence factor can be taken into account, if necessary.

Note: Rexroth supplies appropriate transformers (see chapter 10 Additional Components).

Courtesy of CMA/Flodyne/Hydradyne ▪ Motion Control ▪ Hydraulic ▪ Pneumatic ▪ Electrical ▪ Mechanical ▪ (800) 426-5480 ▪ www.cmafh.com

6.7 The Ground Conditions of the Power Supply Network

Grounded three-phase current networks

Drive controllers of the Rexroth EcoDrive Cs family can be operated on three-phase current networks with grounded star point or external conductors without potential isolation.

Ungrounded three-phase networks

Ungrounded networks (IT networks) present the increased danger of unallowable phase to ground overvoltages occurring. Drive controllers of the Rexroth EcoDrive Cs family can be protected against overvoltages

- By connecting them via an isolating transformer (the star point of the output side and the PE connection of the power supply unit are linked on a shared ground rail)

- or -

- If the facility is protected via an overvoltage suppressor.

Note: Connecting Rexroth EcoDrive Cs drive controllers via an isolating transformer offers the best protection against overvoltage as well as the greatest operating safety.

Overvoltage

The periodic overvoltage of Rexroth EcoDrive Cs drive controllers between phase (L1, L2, L3) and ground may not exceed 1000 V (threshold value).

Transient overvoltage (< 50 µs) may, as per EN61800-3/1996, equal a max value of 1000 V phase to phase and 2000 V phase to ground.

Note: If higher overvoltages occur, then they must be limited with the use of overvoltage suppressors in the cabinet or building.

Note: Mains voltages exceeding the specified range require the use of a step-down transformer.

Courtesy of CMA/Flodyne/Hydradyne ▪ Motion Control ▪ Hydraulic ▪ Pneumatic ▪ Electrical ▪ Mechanical ▪ (800) 426-5480 ▪ www.cmafh.com

6.8 Earth-leakage Circuit Breaker

It is **not** possible to use a earth-leakage circuit breaker in Rexroth EcoDrive Cs drive controllers (EN 50178/1994, section: 5.3.2.3).

Protection against indirect contact is implemented by the protective grounded housing of the components of the drive system.

6.9 Control Circuits for the Mains Connection

Overview

The control circuits recommended by Rexroth specify the functional principle.

Note: The choice of control and its effects depends on the extent of the functions and the operating sequence of facility or machine. It is therefore the responsibility of the manufacturer of the installation and machine.

Signal contact ready-to-operate Bb

The ready to operate message is output via a relay contact (N/O). If the Bb contact closes, then the drive is ready to receive power. The contact is thus a precondition for connecting the mains contactor.

CAUTION

Danger of damage!

⇒ The effectiveness of the separation of, the mains connection via signal contact "Ready to operate Bb" or the multi-circuits of all Rexroth EcoDrive Cs Bb contacts must be ensured!

⇒ See also Functional Description of firmware: "Power shutdown with fault"

Note: When the mains contactor is shut off the mains coil causes overvoltages. These can cause the Bb contact to drop prematurely. To attenuate overvoltage use overvoltage limiters with diode combinations.

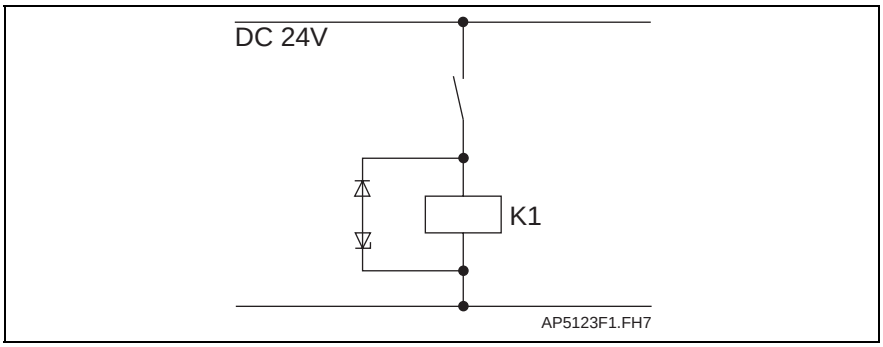

Fig. 6-20: Recommended protective circuits

Courtesy of CMA/Flodyne/Hydradyne ▪ Motion Control ▪ Hydraulic ▪ Pneumatic ▪ Electrical ▪ Mechanical ▪ (800) 426-5480 ▪ www.cmafh.com

The use of varistors and RC modules as protective circuits is not allowed. Varistors age and increase their locking currents. RC modules make excessive demands of the switching capabilities of the Bb contact. This leads to early failures of connected components and units.

Note: Load limits of the Bb contacts must be maintained. Contactors with AC excitation or those that exceed the load limits of the effected contact elements (Bb contacts, etc.) can be controlled with the use of auxiliary contactors.

CAUTION

Damages!

⇒ Before switching the device on again, wait at least 300 ms plus the fall-delay time (typically 80...150 ms) of the mains contactor.

Control Circuits with E-Stop

Pre-requisite:

Note: The E-stop input is available if the E-stop function has been activated in the software and the digital input has been configured accordingly (see Functional Description of firmware).

Use the E-stop function if drive-internal error reactions must be activated as quickly as possible as a result of the following events:

- The emergency off button is pressed.
- Power is shut down.
- Error message from control (lag error monitor, emergency off actuated by the control).

Note: If the E-stop function is not used, then the drive-internal error reaction is not triggered until the K1 contactor opens and, as a result, "undervoltage in DC bus" is detected in the controller.

Courtesy of CMA/Flodyne/Hydradyne ▪ Motion Control ▪ Hydraulic ▪ Pneumatic ▪ Electrical ▪ Mechanical ▪ (800) 426-5480 ▪ www.cmafh.com

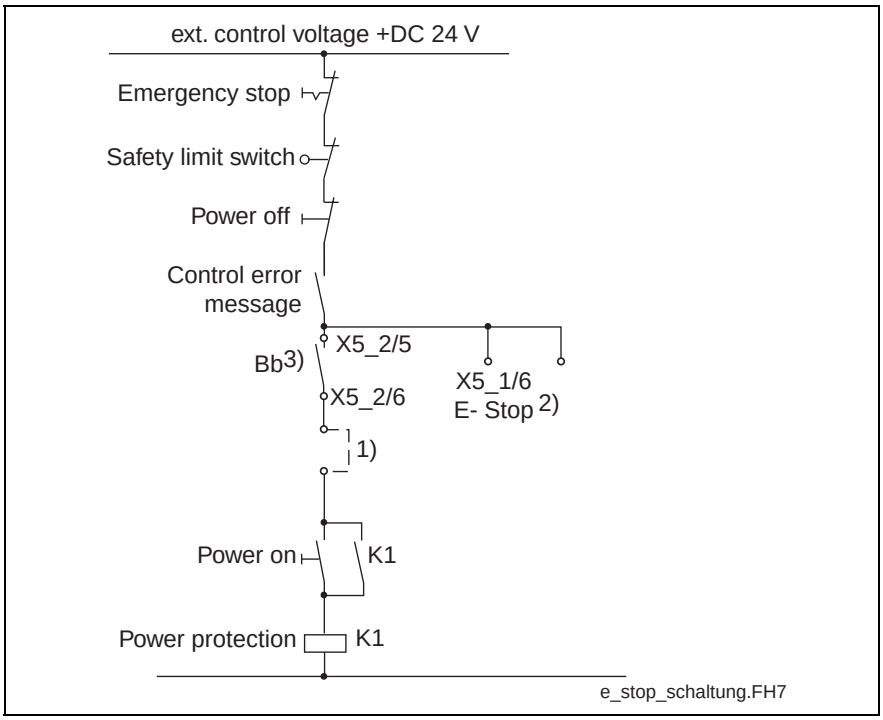

1): Integrating Bb contacts of more drive controllers in series connection. (Bb contact: X5_2, Pin 5 and 6);
2): E-stop for more drive controllers on same contactor.
3): Switching power of Bb contact must be noted.

Fig. 6-21: Example of generating the E-stop signal

Note: Do not pick off the E-Stop signal after the Bb contact.

If the safety end switches illustrated also function as a travel range limit, then a separate set-up must be created in case of actuation, which makes it possible to move back out of the end position!

=> See also Functional Description of firmware: "Travel range limits".

Courtesy of CMA/Flodyne/Hydradyne ▪ Motion Control ▪ Hydraulic ▪ Pneumatic ▪ Electrical ▪ Mechanical ▪ (800) 426-5480 ▪ www.cmafh.com

7 Designing the Control Cabinet

7.1 Notes on Control Cabinet Project Planning

All drive components, with the exception of motors, are intended for mounting into a control cabinet. When planning the control cabinet, take the technical data of the drive components into account.

To determine the necessary control cabinet size, not only the mechanical dimensions (dimension sheets, etc.) but also such thermal features as the power dissipation of the individual components, cooling air outlet temperatures etc. must be taken into consideration.

Mounting Position and Distances

Mounting Position

⇒ Mount the drive controllers and, if required, the auxiliary braking resistor modules in such a way that their longitudinal axis correlates with the natural direction of convection. The natural convection supports the forced cooling air current. The formation of individual heat spots is inhibited.

⇒ Put the backs of the drive controllers on the mounting surface (mounting plate) of the control cabinet with all-over contact.

Distances

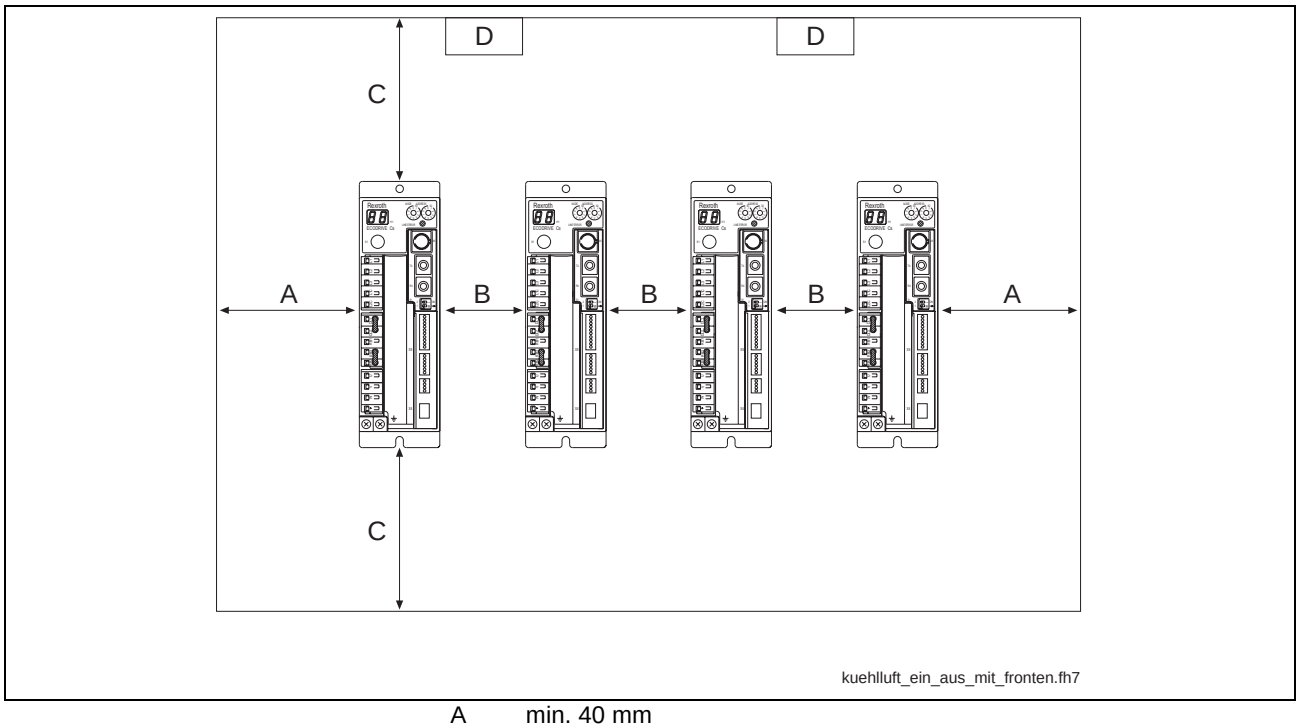

A min. 40 mm
B: min. 10 mm (min. 15 mm if you use an encoder adapter (SUP-E04-DKC*CS-xxx))
C: min. 100 mm
D: arrangement of the blowers (if blowers are necessary)

Fig. 7-1: Distances in the control cabinet

Courtesy of CMA/Flodyne/Hydradyne ▪ Motion Control ▪ Hydraulic ▪ Pneumatic ▪ Electrical ▪ Mechanical ▪ (800) 426-5480 ▪ www.cmafh.com

CAUTION

High temperature

Risk of damage to temperature-sensitive control cabinet components in the area of the cooling air outlet.

⇒ Make sure the distances are sufficient.

Arranging the Components in the Control Cabinet

Control Cabinet with Multiple Line Structure

Note: In particular when arranging components in multiple lines within the control cabinet, it is important to observe their max. air inlet temperature (see technical data) and, if necessary, to mount air baffles with blowers used for this specific purpose.

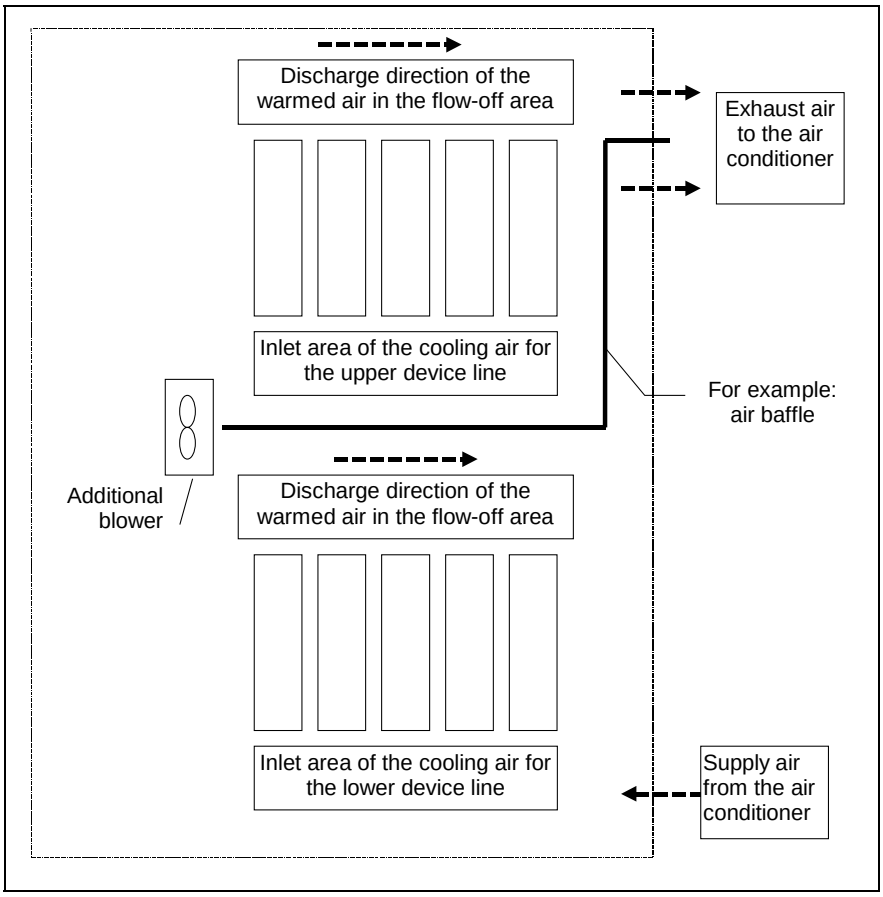

Fig. 7-2: Example of arrangement for multiple line structure

Courtesy of CMA/Flodyne/Hydradyne ▪ Motion Control ▪ Hydraulic ▪ Pneumatic ▪ Electrical ▪ Mechanical ▪ (800) 426-5480 ▪ www.cmafh.com

7.2 Using Cooling Units in the Control Cabinet

Unless the rated data are reduced the drive controller may only be operated up to a specified maximum ambient temperature (see chapter 4.3). It is therefore possible that a cooling unit will be required.

CAUTION

Possible damage to the controller
Operational safety of the machine endangered
⇒ Note the following instructions

Avoiding Dripping or Spraying Water

Due to their operating principle condensation water is formed when cooling units are used. For this reason, please observe the following information:

- Always position cooling units in such a way that condensation water cannot drip onto electronic equipment in the control cabinet.
- Position the cooling unit in such a way that the blower of the cooling unit does not spray accumulated condensation water onto electronic equipment.

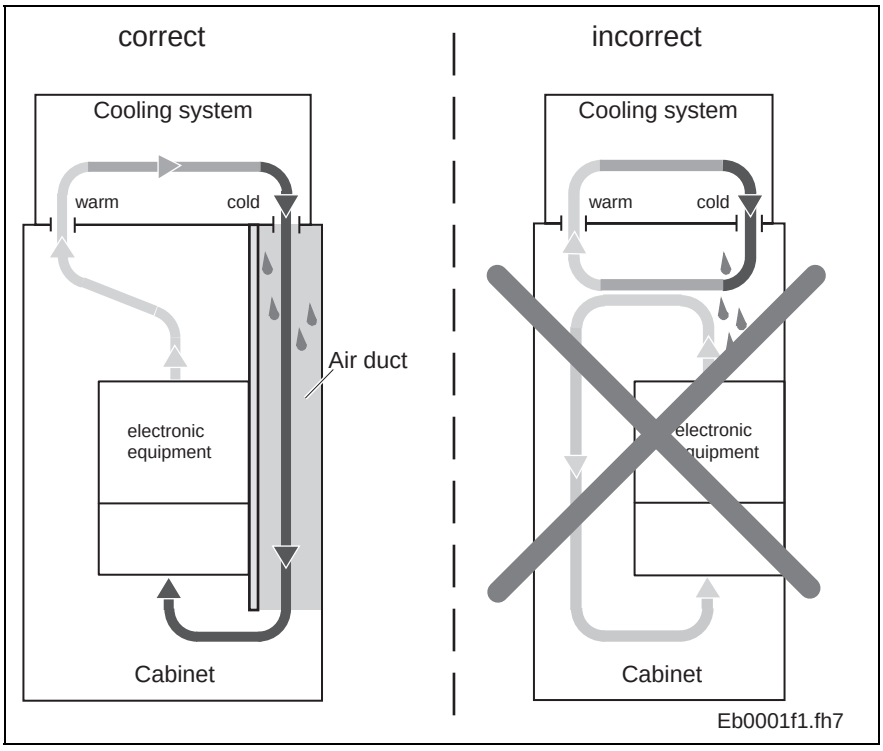

Fig. 7-3: Arranging the cooling unit on the control cabinet

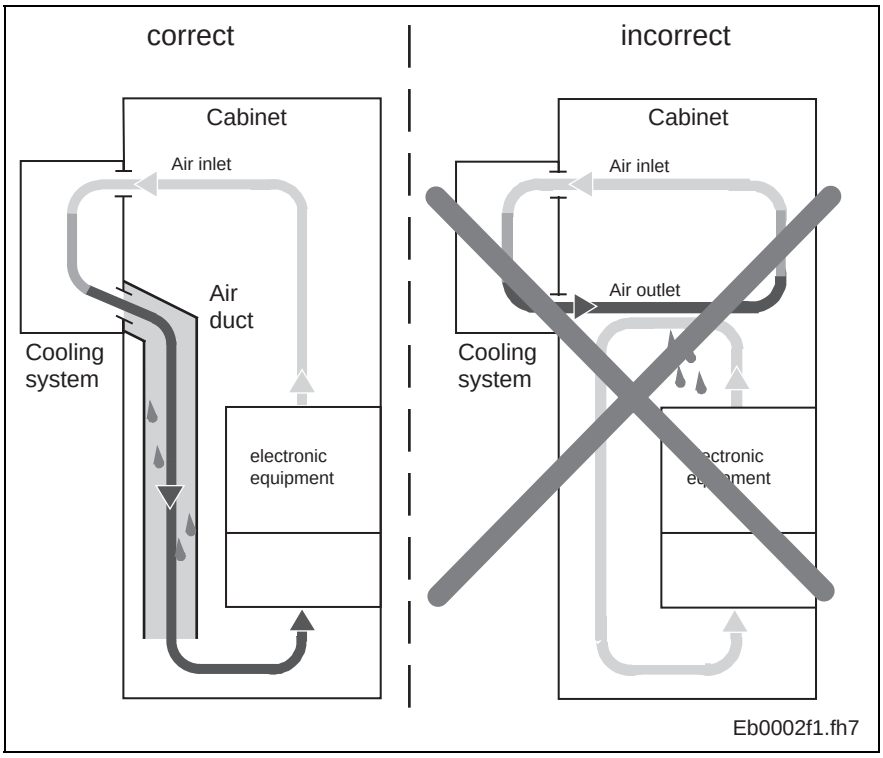

Fig. 7-4: Arranging the cooling unit on the front of the control cabinet

Avoiding Moisture Condensation

Moisture condensation occurs when the temperature of the device is lower than the ambient temperature.

- Set cooling units with temperature adjustment to the maximum surrounding temperature and not lower!
- Set cooling units with follow-up temperature in such a way that the interior temperature of the control cabinet is no lower than the temperature of the surrounding air. Set the temperature limitation to the maximum surrounding temperature.
- Only use well-sealed control cabinets so that moisture condensation cannot arise as a result of warm and moist external air entering the cabinet.
- In the event that control cabinets are operated with the doors open (commissioning, servicing etc.) it is essential to ensure that after the doors are closed the drive controllers cannot at any time be cooler than the air in the control cabinet, as otherwise moisture condensation can occur. In other words, ensure sufficient circulation in the cabinet to avoid any heat spots.

Courtesy of CMA/Flodyne/Hydradyne ▪ Motion Control ▪ Hydraulic ▪ Pneumatic ▪ Electrical ▪ Mechanical ▪ (800) 426-5480 ▪ www.cmafh.com

Courtesy of CMA/Flodyne/Hydradyne ▪ Motion Control ▪ Hydraulic ▪ Pneumatic ▪ Electrical ▪ Mechanical ▪ (800) 426-5480 ▪ www.cmafh.com

7.3 General Information

Damage can be caused to the drive controller or circuit boards if electrostatic charging present in people and/or tools is discharged across them. Therefore, please note the following information:

CAUTION

Damage to electronic components and interference with their safety of operation caused by electrostatic charges!

⇒ Objects coming into contact with components and circuit boards must be discharged by means of grounding. Otherwise errors may occur when triggering motors and moving elements.

Such objects include:

- the copper bit when soldering
- the human body (ground connection caused by touching a conductive, grounded item)
- parts and tools (place them on a conductive support)

Endangered components may only be stored or dispatched in conductive packaging.

Note: Rexroth connection diagrams are only to be used for producing installation connection diagrams! The machine manufacturer's installation connection diagrams must be used for wiring the installation!

General Information

- Lay signal lines separately from the load resistance lines because of the occurrence of interference.
- Feed analog signals (e.g. command values, actual values) via shielded lines.
- Do not connect mains, DC bus or power leads to low voltages or allow them to come into contact with these.
- When carrying out a high voltage test or an applied-overvoltage withstand test on the machine's electrical equipment, disconnect all connections to the units. This protects the electronic components (permitted in accordance with EN 60204-1). During their routine testing, Rexroth drive components are tested with regard to high voltage and isolation in accordance with EN 50178.

CAUTION

Risk of damage to the controller by connecting and disconnecting live connections!

⇒ Do not connect and disconnect live connections.

Courtesy of CMA/Flodyne/Hydradyne ▪ Motion Control ▪ Hydraulic ▪ Pneumatic ▪ Electrical ▪ Mechanical ▪ (800) 426-5480 ▪ www.cmafh.com

7.4 Wire Routing in the Control Cabinet

- Maintain a distance of at least 100 mm between power cables and control or signal cables (e.g. feedback cables) or
- separate cable duct with metal divider

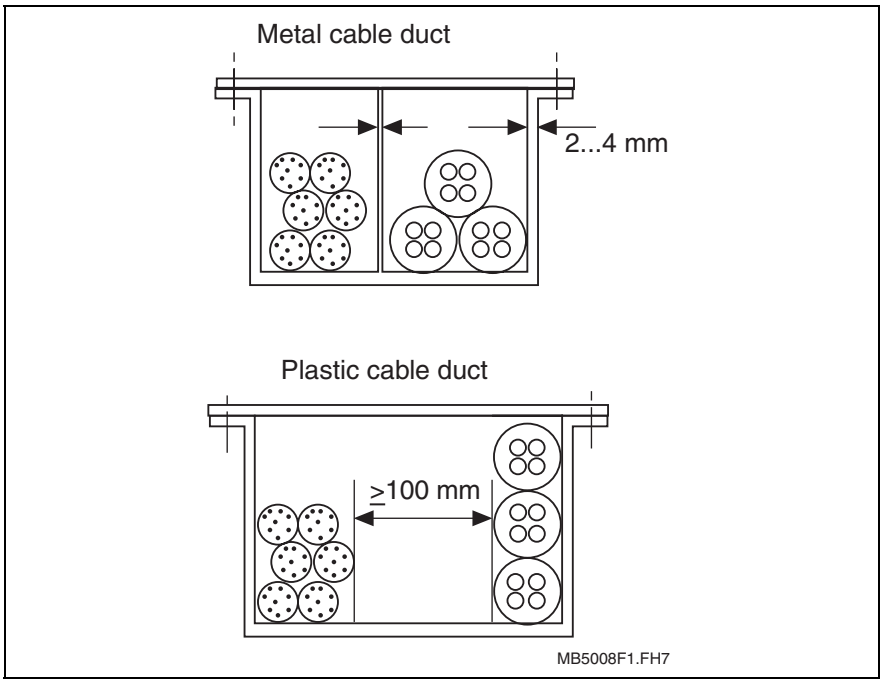

Fig. 7-5: Cable duct variants

Note: For details please see Project Planning Manual "Electromagnetic Compatibility (EMC) in Drive and Control Systems", document typecode DOK-GENERL-EMV********-PRxx.

7.5 EMC in the Control Cabinet

Note: For details please see Project Planning Manual "Electromagnetic Compatibility (EMC) in Drive and Control Systems", document typecode DOK-GENERL-EMV********-PRxx.

Courtesy of CMA/Flodyne/Hydradyne ▪ Motion Control ▪ Hydraulic ▪ Pneumatic ▪ Electrical ▪ Mechanical ▪ (800) 426-5480 ▪ www.cmafh.com

8 Motors

8.1 Overview

Basic Type

- motor with degree of protection IP65 (incl. plug-in connectors; exception: motor shaft (IP40))
- without holding brake
- with incremental encoder
- with plain shaft

Options

- holding brake
- absolute encoder
- shaft with key

Benefits

MSM motors are characterized by the following advantages:

- High operational reliability
- Maintenance-free operation (owing to the brushless design and use of bearings grease-lubricated for their entire service life)
- Use under adverse environmental conditions is possible
- Overload protection (owing to motor temperature monitoring)
- High performance data
- High dynamics (owing to the favorable ratio of torque to inertia mass)
- High overload capability (owing to the favorable heat dissipation from the stator windings to the outside wall of the motor housing)
- Peak torque utilizable across a wide speed range (owing to electronic commutation)
- Continuous start-stop operation possible with high repeat frequencies (owing to electrical commutation)
- Any installation position desired
- Easy cabling (owing to cable sets, available in various designs)
- Simple and quick startup (owing to data memory in the motor encoder unit)
- MSM motors are permanent-magnet motors with electronic commutation. Special magnet materials permit the motors to be designed with low inertia masses.

Courtesy of CMA/Flodyne/Hydradyne ▪ Motion Control ▪ Hydraulic ▪ Pneumatic ▪ Electrical ▪ Mechanical ▪ (800) 426-5480 ▪ www.cmafh.com

8.2 MSM Type Code

Each order of a product by Rexroth must be based on the type code. All available motor versions are uniquely described by their type code. The following figures describe the individual characters of the type code (abbrev. column) and their meaning.

Motor MSM020B

Abbrev. Column →	1	2	3	4	5	6	7	8	9	10	11	12	13	14	15	16	17	18	19	20	21	22	23	24	25	26	27	28	29	30	31	32	33	34	35	36	37	38	39	40
Example:	M	S	M	0	2	0	B	-	0	3	0	0	-	N	N	-	C	0	-	C	G	1																		

1. Product
1.1 MSM . . . . . = MSM

2. Size
2.1 020 . . . . . = 020

3. Length
3.1 Length . . . . . = B

4. Windings
4.1 MSM020B . . . . . = 0300

5. Cooling mode
5.1 natural convection, without blower . . . . . = NN

6. Encoder
6.1 Incremental encoder . . . . . = C0
6.2 Multiturn absolute encoder . . . . . = M0

7. Electrical connection
7.1 cable tail . . . . . = C

8. Shaft
8.1 key per DIN 6885-1. . . . . = C
8.2 plain shaft . . . . . = G

9. Holding brake
9.1 without holding brake . . . . . = 0
9.2 electrical release 0.29 Nm . . . . . = 1

10. Standard reference

Standard	Title	Edition
DIN 6885-1	Drive Type with Fastenings without Taper Action; Parallel Keys, Keyways, Deep Pattern	1968-08

Fig. 8-1: Type code for motor MSM020B

Motor MSM030

Abbrev. Column →	1	2	3	4	5	6	7	8	9	10	11	12	13	14	15	16	17	18	19	20	21	22	23	24	25	26	27	28	29	30	31	32	33	34	35	36	37	38	39	40
Example:	M	S	M	0	3	0	B	-	0	3	0	0	-	N	N	-	C	0	-	C	G	1																		

1. Product
1.1 MSM. . . . . = MSM

2. Size
2.1 030 . . . . . = 030

3. Length
3.1 Lengths . . . . . = B, C

4. Windings
4.1 MSM030B . . . . . = 0300
4.2 MSM030C . . . . . = 0300

5. Cooling mode
5.1 natural convection, without blower . . . . . = NN

6. Encoder
6.1 Incremental encoder. . . . . .= C0
6.2 Multiturn absolute encoder. . . . . = M0

7. Electrical connection
7.1 cable tail . . . . . = C

8. Shaft
8.1 key per DIN 6885-1. . . . . = C
8.2 plain shaft . . . . . = G

9. Holding brake
9.1 without holding brake . . . . . = 0
9.2 electrical release 1.27 Nm . . . . . = 1

10. Standard reference

Standard	Title	Edition
DIN 6885-1	Drive Type with Fastenings without Taper Action; Parallel Keys, Keyways, Deep Pattern	1968-08

Fig. 8-2: Type code for motor MSM030

Courtesy of CMA/Flodyne/Hydradyne ▪ Motion Control ▪ Hydraulic ▪ Pneumatic ▪ Electrical ▪ Mechanical ▪ (800) 426-5480 ▪ www.cmafh.com

Motor MSM040B

Abbrev. Column →	1	2	3	4	5	6	7	8	9	10	11	12	13	14	15	16	17	18	19	20	21	22	23	24	25	26	27	28	29	30	31	32	33	34	35	36	37	38	39	40
Example:	M	S	M	0	4	0	B	-	0	3	0	0	-	N	N	-	C	0	-	C	G	1																		

1. Product
1.1 MSM . . . . . = MSM

2. Size
2.1 040 . . . . . = 040

3. Length
3.1 Length . . . . . = B

4. Windings
4.1 MSM040B . . . . . = 0300

5. Cooling mode
5.1 natural convection, without blower . . . . . = NN

6. Encoder
6.1 Incremental encoder . . . . . = C0
6.2 Multiturn absolute encoder . . . . . = M0

7. Electrical connection
7.1 cable tail . . . . . = C

8. Shaft
8.1 key per DIN 6885-1 . . . . . = C
8.2 plain shaft . . . . . = G

9. Holding brake
9.1 without holding brake . . . . . = 0
9.2 electrical release 2.45 Nm . . . . . = 1

10. Standard reference

Standard	Title	Edition
DIN 6885-1	Drive Type with Fastenings without Taper Action; Parallel Keys, Keyways, Deep Pattern	1968-08

Fig. 8-3: Type code for motor MSM040B

Note: If you select a motor, regard the detailed informations in the descriptions of the motors and the informations in chapter 8.8 "Application Instructions".

Courtesy of CMA/Flodyne/Hydradyne ▪ Motion Control ▪ Hydraulic ▪ Pneumatic ▪ Electrical ▪ Mechanical ▪ (800) 426-5480 ▪ www.cmafh.com

Courtesy of CMA/Flodyne/Hydradyne ▪ Motion Control ▪ Hydraulic ▪ Pneumatic ▪ Electrical ▪ Mechanical ▪ (800) 426-5480 ▪ www.cmafh.com

Types

Motor	Part No.	Features						Power
		Holding brake		Encoder		Key		
		yes	no	incremental	absolute	yes	no	
MSM020B								
MSM020B-0300-NN-C0-CG0	295551		x	x			x	100 W
MSM020B-0300-NN-C0-CG1	295552	x		x			x	
MSM020B-0300-NN-C0-CC0	295568		x	x		x		
MSM020B-0300-NN-C0-CC1	295569	x		x		x		
MSM020B-0300-NN-M0-CG0	295549		x		x		x	
MSM020B-0300-NN-M0-CG1	295550	x			x		x	
MSM020B-0300-NN-M0-CC0	295566		x		x	x		
MSM020B-0300-NN-M0-CC1	295567	x			x	x		
MSM030B								
MSM030B-0300-NN-C0-CG0	295555		x	x			x	200 W
MSM030B-0300-NN-C0-CG1	295556	x		x			x	
MSM030B-0300-NN-C0-CC0	295572		x	x		x		
MSM030B-0300-NN-C0-CC1	295573	x		x		x		
MSM030B-0300-NN-M0-CG0	295553		x		x		x	
MSM030B-0300-NN-M0-CG1	295554	x			x		x	
MSM030B-0300-NN-M0-CC0	295570		x		x	x		
MSM030B-0300-NN-M0-CC1	295571	x			x	x		
MSM030C								
MSM030C-0300-NN-C0-CG0	295560		x	x			x	400 W
MSM030C-0300-NN-C0-CG1	295561	x		x			x	
MSM030C-0300-NN-C0-CC0	295576		x	x		x		
MSM030C-0300-NN-C0-CC1	295577	x		x		x		
MSM030C-0300-NN-M0-CG0	295558		x		x		x	
MSM030C-0300-NN-M0-CG1	295559	x			x		x	
MSM030C-0300-NN-M0-CC0	295574		x		x	x		
MSM030C-0300-NN-M0-CC1	295575	x			x	x		
MSM040B								
MSM040B-0300-NN-C0-CG0	295564		x	x			x	750 W
MSM040B-0300-NN-C0-CG1	295565	x		x			x	
MSM040B-0300-NN-C0-CC0	295580		x	x		x		
MSM040B-0300-NN-C0-CC1	295581	x		x		x		
MSM040B-0300-NN-M0-CG0	295562		x		x		x	
MSM040B-0300-NN-M0-CG1	295563	x			x		x	
MSM040B-0300-NN-M0-CC0	295578		x		x	x		
MSM040B-0300-NN-M0-CC1	295579	x			x	x		

Fig. 8-4: Types

Rexroth Bosch Group

Courtesy of CMA/Flodyne/Hydradyne ▪ Motion Control ▪ Hydraulic ▪ Pneumatic ▪ Electrical ▪ Mechanical ▪ (800) 426-5480 ▪ www.cmafh.com

8.3 Technical Data

Basics

Thermal Limit Conditions

The motor data and characteristic curves are determined using MSM motors under the following conditions:

- Environmental temperature approx. 40 °C
- Structure **not** insulated
- Permissible winding overtemperature ΔT = 80 K (related to environment)
- If motors with the optional holding brake are concerned, the data are always specified for motors **with** holding brake.

Operating Modes

Rexroth motors are documented according to the test criteria and measuring methods of EN 60034-1. The characteristic curves specified correspond to the operating modes S1 or S6.

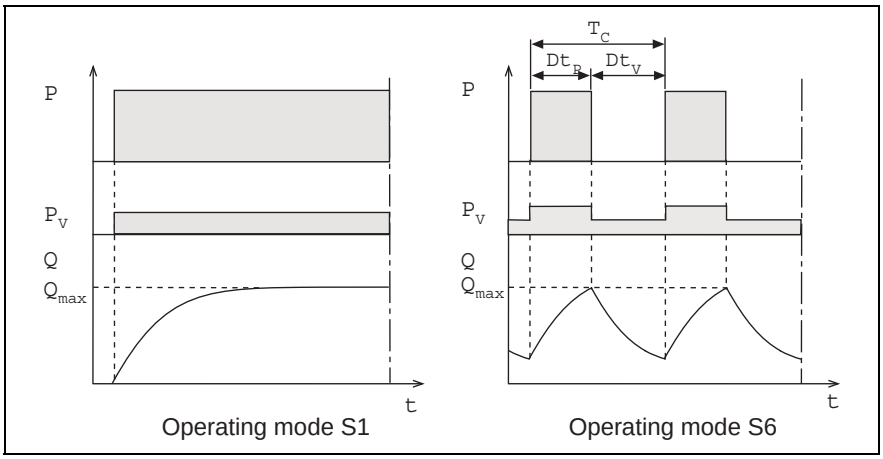

P:	Load
P_V:	Electric losses
Θ:	Temperature
$Θ_{max}$:	Highest temperature (motor housing)
t:	Time
T_C:	Cycle duration
$Δt_P$:	Operating time with constant load
$Δt_V$:	Idle time

Fig. 5-1: Operating modes according to EN 60034-1: 1998

ON time

The operating mode S6 is supplemented by specification of the ON time (ED) in ≤100%. The ON time is calculated with the following formula:

$$ED = \frac{\Delta t_P}{T_C} \cdot 100\% = \left(\frac{M_d}{M_{KB}}\right)^2 \cdot 100\%$$

ED:	Cyclic duration factor in %
T_C:	Cycle duration
$Δt_P$:	Operating time with constant load
M_d:	Continuous torque
M_{KB}:	Short time operating torque

Fig. 5-2: Cyclic duration factor

Courtesy of CMA/Flodyne/Hydradyne ▪ Motion Control ▪ Hydraulic ▪ Pneumatic ▪ Electrical ▪ Mechanical ▪ (800) 426-5480 ▪ www.cmafh.com

Definition of Parameters

Electric parameters

Continuous torque at standstill M_{dN}
The continuous torque that can be output at the motor output shaft at a speed of n = 0.

Continuous current at standstill I_{dN}
Phase current (crest value) of the motor required for the continuous torque at standstill M_{dN} at a speed of n = 0.

Peak current I_{max}
Maximum, briefly permissible phase current (crest value) of the motor without adverse affect on the permanent magnet circuit of the motor.

Torque constant at 20 °C K_M
Ratio of the increase in torque to the motor phase current (crest value) at a motor temperature of 20 °C. Unit: (Nm/A). Applicable up to approx. i = 2x I_{dN} .

Voltage constant at 20 °C $K_{E(eff)}$
Root-mean-square value of the induced motor voltage at a motor temperature of 20 °C and 1000 revolutions per minute. Unit: (V/1000 min^{-1}).

Winding resistance at 20 °C R_{12}
Winding resistance measured between two phases in ohms (Ω).

Winding inductivity L_{12}
Inductivity measured between two phases in (mH).

Number of pole pairs p
Number of pole pairs of the motor.

Rated speed n_N
Typical useful speed defined by the manufacturer. Depending on the particular application, other useful speeds are possible (see speed-torque curve).

Rated torque M_N
Continuous torque that can be output at the rated speed in operating mode S1.

Rated current $I_{N(eff)}$
Phase current of the motor at the rated speed and load with rated torque, specified as root-mean-square value.

Rated output P_N
Power consumption of the motor at the rated speed and load with rated torque, specified in kilowatts (kW).

Rated voltage $U_{N(eff)}$
Root-mean-square value of the voltage to be applied to the motor, with the motor loaded with the rated torque and the rated speed. Unit (V).

Rated frequency f_N
Frequency of the rated voltage at rated speed (Hz).

Courtesy of CMA/Flodyne/Hydradyne ▪ Motion Control ▪ Hydraulic ▪ Pneumatic ▪ Electrical ▪ Mechanical ▪ (800) 426-5480 ▪ www.cmafh.com

Mechanical parameters

Maximum speed n_{max}

Maximum permissible speed of the motor. Limiting factors can have mechanical (centrifugal forces, bearing stress) or electrical (DC link voltage) causes.

Theoretical maximum torque M_{max}

Maximum torque that can be output for approx. 400 ms at a peak current of I_{max} (guaranteed value which, owing to production tolerances, may be higher by 20%). The achievable maximum torque depends on the drive controller used. Only the maximum torques M_{max} specified in the selection lists for the motor-controller combination are binding.

Moment of inertia of the rotor $J_{M)}$

Moment of inertia of the rotor without the optional holding brake. Unit (kgm²).

Mass m_M

Motor mass without the optional holding brake and optional motor fan, specified in kg.

Thermal time constant T_{th}

Time of the temperature rise to 63% of the final temperature of the motor housing with the motor loaded with the permissible S1 continuous torque. The thermal time constant is destined for the size of the motors and the used method of cooling.

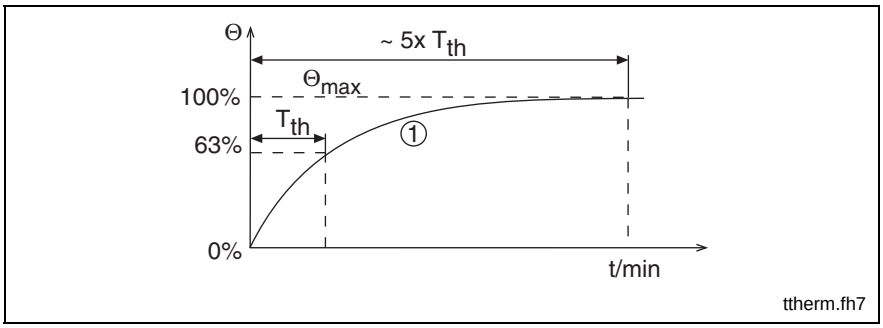

(1): Course of the motor housing temperature over time
Θ_{max}: Highest temperature (motor housing)
T_{th}: Thermal time constant

Fig. 5-3: Thermal time constant

Courtesy of CMA/Flodyne/Hydradyne ▪ Motion Control ▪ Hydraulic ▪ Pneumatic ▪ Electrical ▪ Mechanical ▪ (800) 426-5480 ▪ www.cmafh.com

8.4 MSM020B

Dimensions

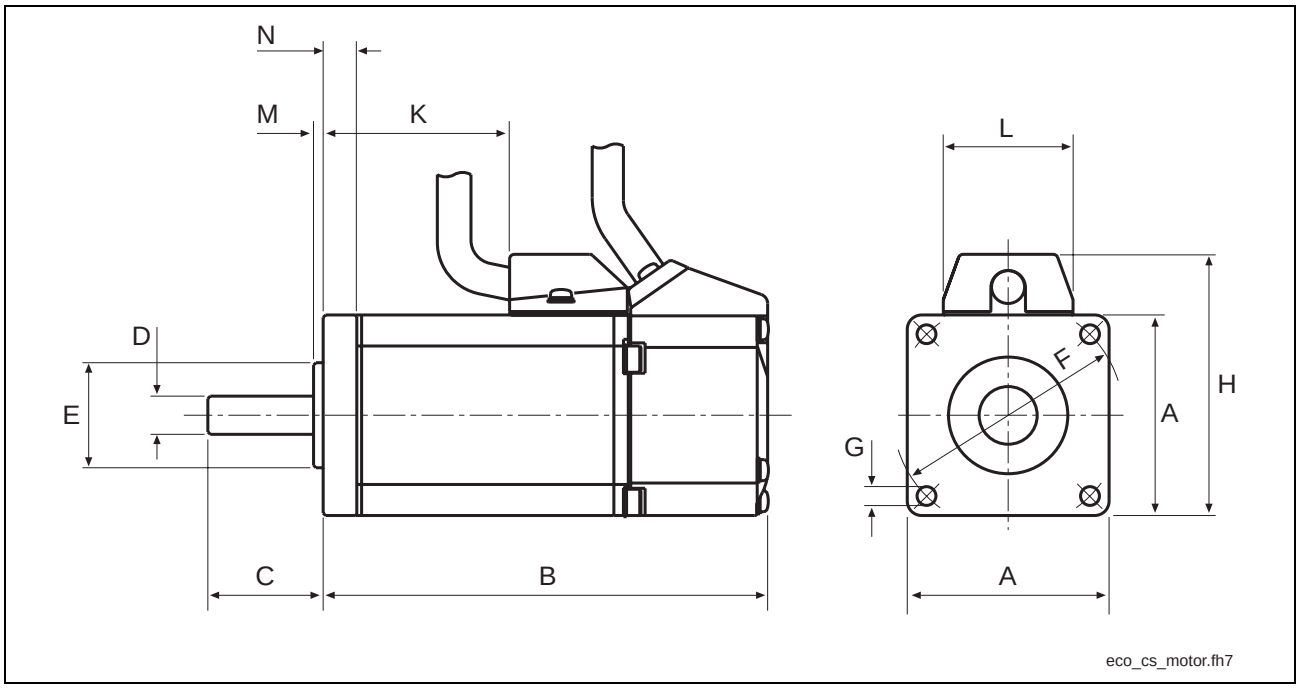

Fig. 8-5: Front and side view of a motor

Motor type	A	B	C	D	E	F	G	H	K	L	M	N
without brake with incremental encoder	42	92.5	24	∅ 8^{h6}	∅ 22^{h7}	∅ 48	∅ 3.4	55	38.8	27	2	7
with brake with incremental encoder	42	124.0	24	∅ 8^{h6}	∅ 22^{h7}	∅ 48	∅ 3.4	55	38.8	27	2	7
without brake with absolute encoder	42	109.0	24	∅ 8^{h6}	∅ 22^{h7}	∅ 48	∅ 3.4	55	38.8	27	2	7
with brake with absolute encoder	42	140.5	24	∅ 8^{h6}	∅ 22^{h7}	∅ 48	∅ 3.4	55	38.8	27	2	7

all data in mm

Fig. 8-6: Dimensions

Courtesy of CMA/Flodyne/Hydradyne ▪ Motion Control ▪ Hydraulic ▪ Pneumatic ▪ Electrical ▪ Mechanical ▪ (800) 426-5480 ▪ www.cmafh.com

Key

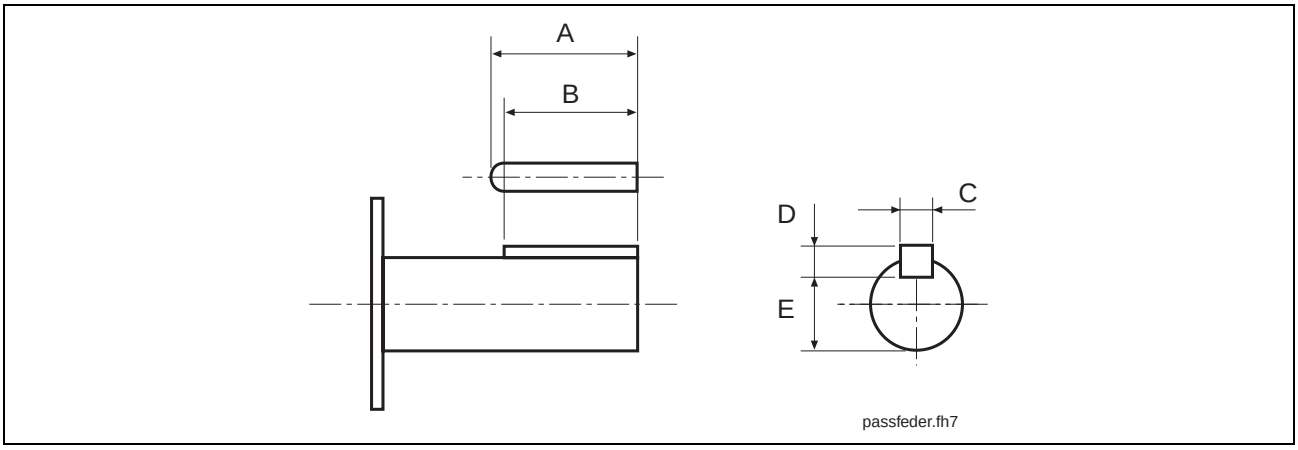

A	B	C	D	E
14	12.5	3h9	3	6.2

all data in mm

Fig. 8-7: Key

Cables at the Motor

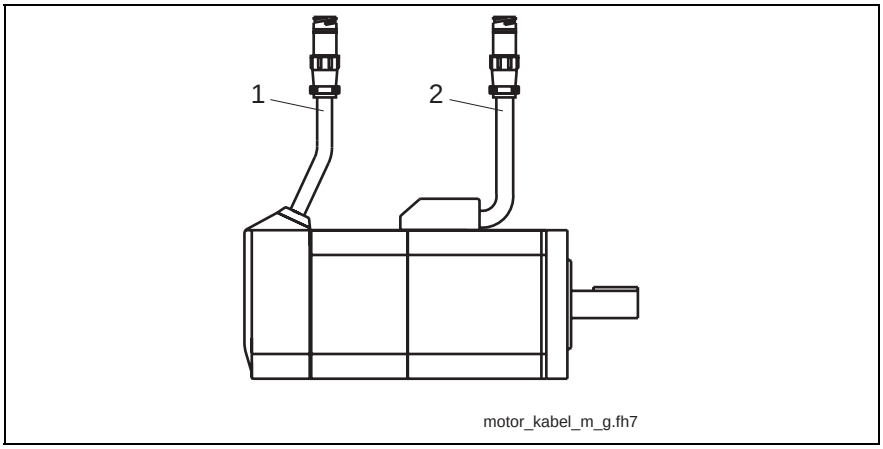

1: encoder cable
2: motor cable

Fig. 8-8: Cables at the motor

Length of cables (motor ↔ connector):

- motor cable: 200 mm (+70 mm connector)
- encoder cable: 230 mm (+62 mm connector)

Motor Cable See chapter 10.1

Encoder Cable See chapter 10.1

Courtesy of CMA/Flodyne/Hydradyne ▪ Motion Control ▪ Hydraulic ▪ Pneumatic ▪ Electrical ▪ Mechanical ▪ (800) 426-5480 ▪ www.cmafh.com

Technical Data

Designation	Symbol	Unit	Value
cooling type			natural convection
motor overtemperature		K	80 at 30 °C ambient temperature (max. 130 °C internal temperature; max. 110 °C surface temperature)
Electric parameters			
continuous torque at standstill	M_{dN}	Nm	0.3
continuous current at standstill	I_{dN}	A	0.9
peak current	I_{max}	A	3
torque constant at 20 °C [1])	K_m	Nm/A	0.33 ±10%
voltage constant at 20 °C	$K_{E(eff)}$	$V/1000min^{-1}$	20.3 ±10%
winding resistance at 20 °C	R_{12}	Ω	17.8 ±10%
winding inductance	L_{12}	mH	15.3 ±8%
number of pole pairs	p	-	4
Rated data [2])			
rated speed	n_N	min^{-1}	3000
rated torque	M_N	Nm	0.3
rated current	I_N	A	0.9
rated power	P_N	W	94
rated voltage	U_N	V	88
rated frequency	f_N	Hz	200
Mechanical parameters			
rotor inertia [3])	J_M	kgm²	0.032×10^{-4} (0.036×10^{-4})
theoretical maximum torque	M_{max}	Nm	0.95
minimum power strand cross section [4])	S	mm^2	0.75
thermal time constant	T_{th}	s	12
maximum speed	n_{max}	min^{-1}	5000
motor mass [3])	m	kg	0.5 (0.7)
allowed storage and transport temp.	T_L	°C	-20 ... +80
allowed ambient temperature [6])	T_{um}	°C	+0 ... +40
max. installation altitude [6])	h	m	1000
degree of protection [7])			IP65 (housing); IP40 (output shaft)
insulation class (according to DIN VDE0530 part 1)			B
housing painting			none

[1]) K_m is to be used for calculations with crest values (I_{dN}, I_{max}). For calculations with root-mean-square values (rated data), the torque constant K_m must be multiplied by a factor of $\sqrt{2}$.
[2]) Values determined according to EN 60034-1. Current and voltage specified as root-mean-square values.
[3]) Value in brackets valid for motor with holding brake.
[4]) Applicable to REXROTH cables. Rated according to VDE0298-4 (1992) and installation type B2 according to EN 60204-1 (1993) at an ambient temperature of 40 °C.
[5]) Without blower unit:
[6]) If the limits specified are exceeded, the performance data must be reduced, if necessary.
[7]) Provided the power and encoder cables are mounted properly.

Fig. 8-9: MSM020B technical data

Courtesy of CMA/Flodyne/Hydradyne ▪ Motion Control ▪ Hydraulic ▪ Pneumatic ▪ Electrical ▪ Mechanical ▪ (800) 426-5480 ▪ www.cmafh.com

Characteristic: Torque - Speed

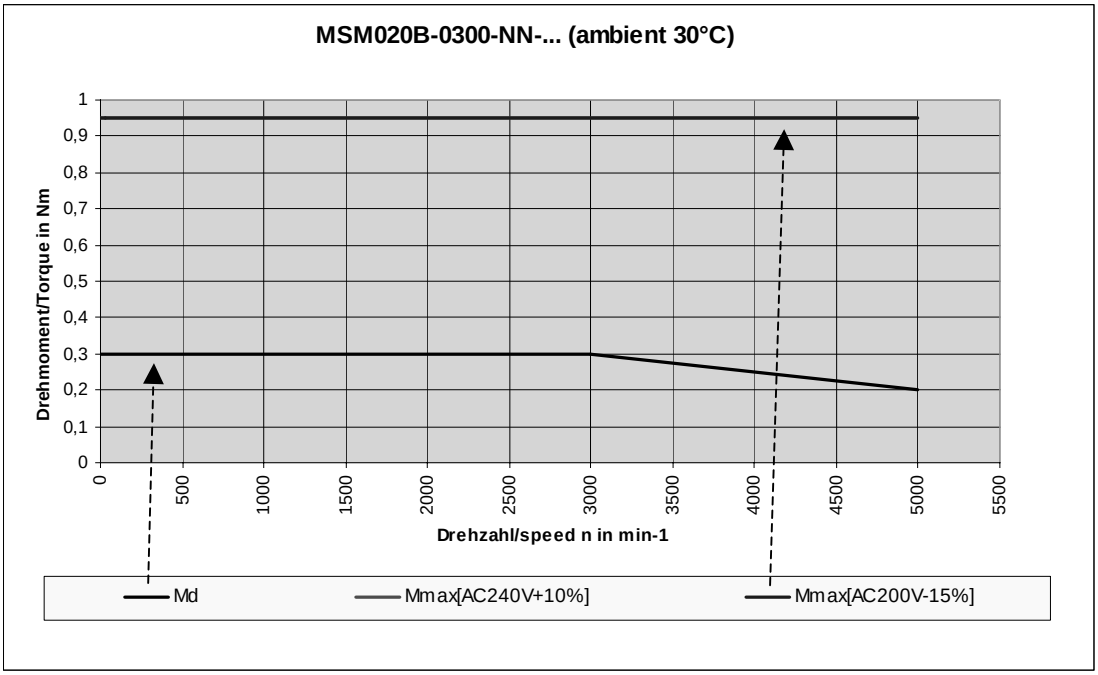

Fig. 8-10: MSM020B torque characteristic

Characteristic: Torque - Temperature

Higher ambient temperatures cause a derating of the available torque:

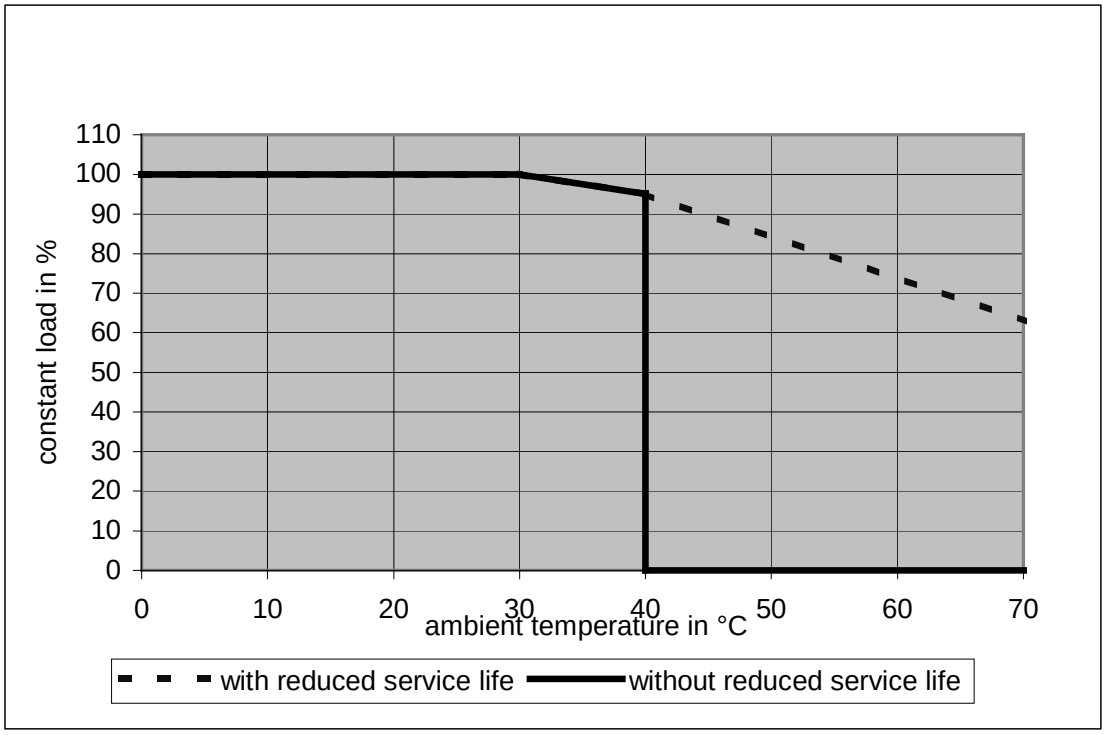

Fig. 8-11: MSM020B utilization depending on the ambient temperature

Courtesy of CMA/Flodyne/Hydradyne ▪ Motion Control ▪ Hydraulic ▪ Pneumatic ▪ Electrical ▪ Mechanical ▪ (800) 426-5480 ▪ www.cmafh.com

8.5 MSM030B

Dimensions

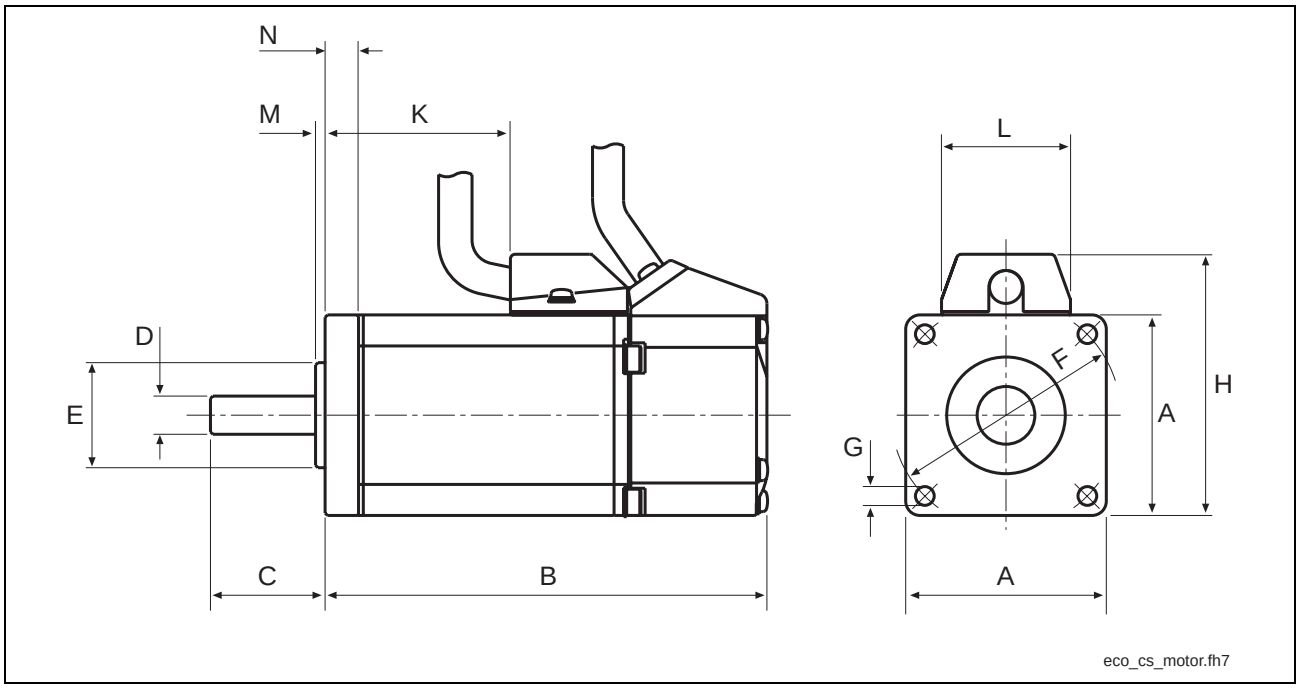

Fig. 8-12: Front and side view of a motor

Motor type	A	B	C	D	E	F	G	H	K	L	M	N
without brake with incremental encoder	60	96.0	30	∅ 11^{h6}	∅ 50^{h7}	∅ 70	∅ 4.5	73	34.0	27	3	7
with brake with incremental encoder	60	129.0	30	∅ 11^{h6}	∅ 50^{h7}	∅ 70	∅ 4.5	73	34.0	27	3	7
without brake with absolute encoder	60	111.0	30	∅ 11^{h6}	∅ 50^{h7}	∅ 70	∅ 4.5	73	34.0	27	3	7
with brake with absolute encoder	60	144.0	30	∅ 11^{h6}	∅ 50^{h7}	∅ 70	∅ 4.5	73	34.0	27	3	7

all data in mm

Fig. 8-13: Dimensions

Courtesy of CMA/Flodyne/Hydradyne ▪ Motion Control ▪ Hydraulic ▪ Pneumatic ▪ Electrical ▪ Mechanical ▪ (800) 426-5480 ▪ www.cmafh.com

Key

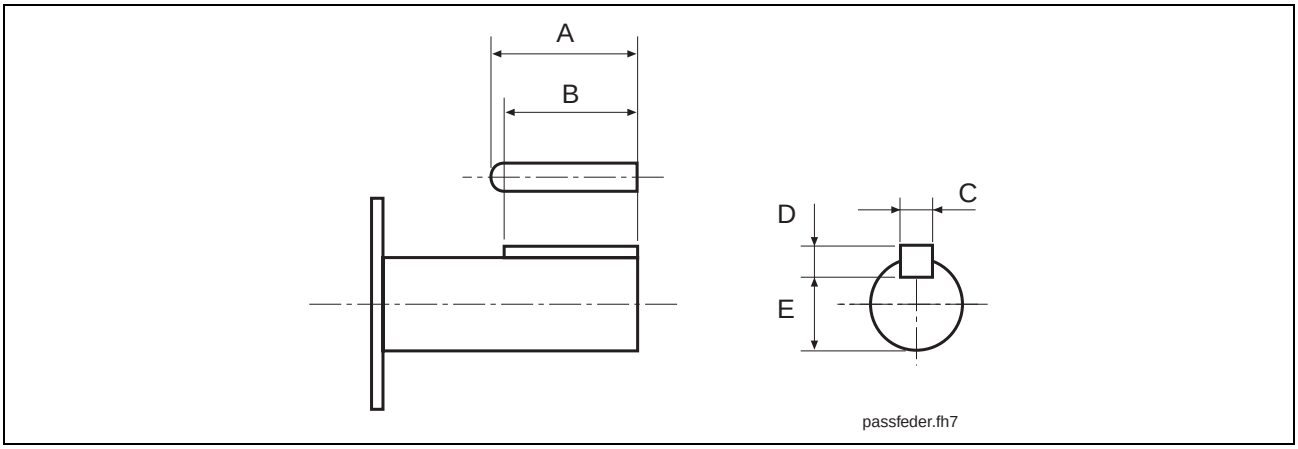

A	B	C	D	E
20	18	4h9	4	8.5

all data in mm

Fig. 8-14: Key

Cables at the Motor

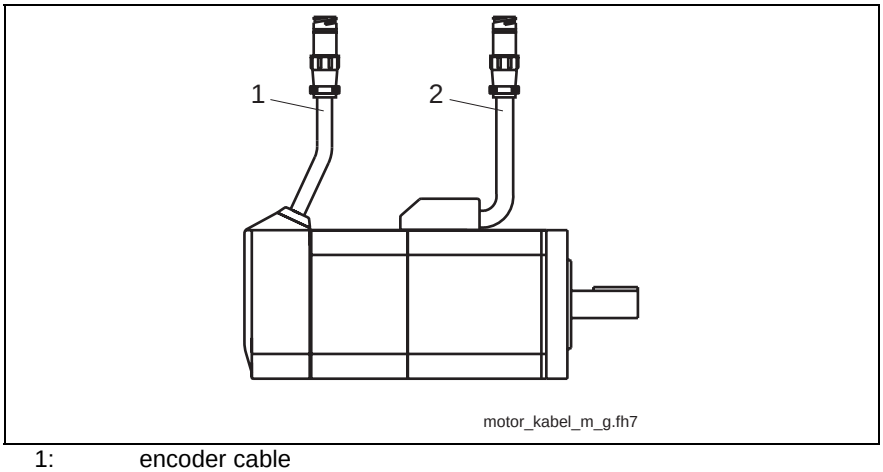

1: encoder cable
2: motor cable

Fig. 8-15: Cables at the motor

Length of cables (motor ↔ connector):

- motor cable: 200 mm (+70 mm connector)
- encoder cable: 220 mm (+62 mm connector)

Motor Cable See chapter 10.1

Encoder Cable See chapter 10.1

Courtesy of CMA/Flodyne/Hydradyne ▪ Motion Control ▪ Hydraulic ▪ Pneumatic ▪ Electrical ▪ Mechanical ▪ (800) 426-5480 ▪ www.cmafh.com

Technical Data

Designation	Symbol	Unit	Value
cooling type			natural convection
motor overtemperature		K	80 at 30 °C ambient temperature (max. 130 °C internal temperature; max. 110 °C surface temperature)
Electric parameters			
continuous torque at standstill	M_{dN}	Nm	0.64
continuous current at standstill	I_{dN}	A	1.6
peak current	I_{max}	A	4.8
torque constant at 20 °C [1])	K_m	Nm/A	0.42 ±10%
voltage constant at 20 °C	$K_{E(eff)}$	V/1000min^{-1}	25.6 ±10%
winding resistance at 20 °C	R_{12}	Ω	6.3 ±7%
winding inductance	L_{12}	mH	21.5 ±8%
number of pole pairs	p	-	4
Rated data [2])			
rated speed	n_N	min^{-1}	3000
rated torque	M_N	Nm	0.64
rated current	I_N	A	1.6
rated power	P_N	W	201
rated voltage	U_N	V	110
rated frequency	f_N	Hz	200
Mechanical parameters			
rotor inertia [3])	J_M	kgm²	0.1 x 10^{-4} (0.13 x 10^{-4})
theoretical maximum torque	M_{max}	Nm	1.91
minimum power strand cross section [4])	S	mm^2	0.75
thermal time constant	T_{th}	s	25
maximum speed	n_{max}	min^{-1}	5000
motor mass [3])	m	kg	0.96 (1.36)
allowed storage and transport temp.	T_L	°C	-20 ... +80
allowed ambient temperature [6])	T_{um}	°C	+0 ... +40
max. installation altitude [6])	h	m	1000
degree of protection [7])			IP65 (housing); IP40 (output shaft)
insulation class (according to DIN VDE0530 part 1)			B
housing painting			none

[1]) K_m is to be used for calculations with crest values (I_{dN}, I_{max}). For calculations with root-mean-square values (rated data), the torque constant K_m must be multiplied by a factor of $\sqrt{2}$.
[2]) Values determined according to EN 60034-1. Current and voltage specified as root-mean-square values.
[3]) Value in brackets valid for motor with holding brake.
[4]) Applicable to REXROTH cables. Rated according to VDE0298-4 (1992) and installation type B2 according to EN 60204-1 (1993) at an ambient temperature of 40 °C.
[5]) Without blower unit:
[6]) If the limits specified are exceeded, the performance data must be reduced, if necessary.
[7]) Provided the power and encoder cables are mounted properly.

Fig. 8-16: MSM030B technical data

Courtesy of CMA/Flodyne/Hydradyne ▪ Motion Control ▪ Hydraulic ▪ Pneumatic ▪ Electrical ▪ Mechanical ▪ (800) 426-5480 ▪ www.cmafh.com

Characteristic: Torque - Speed

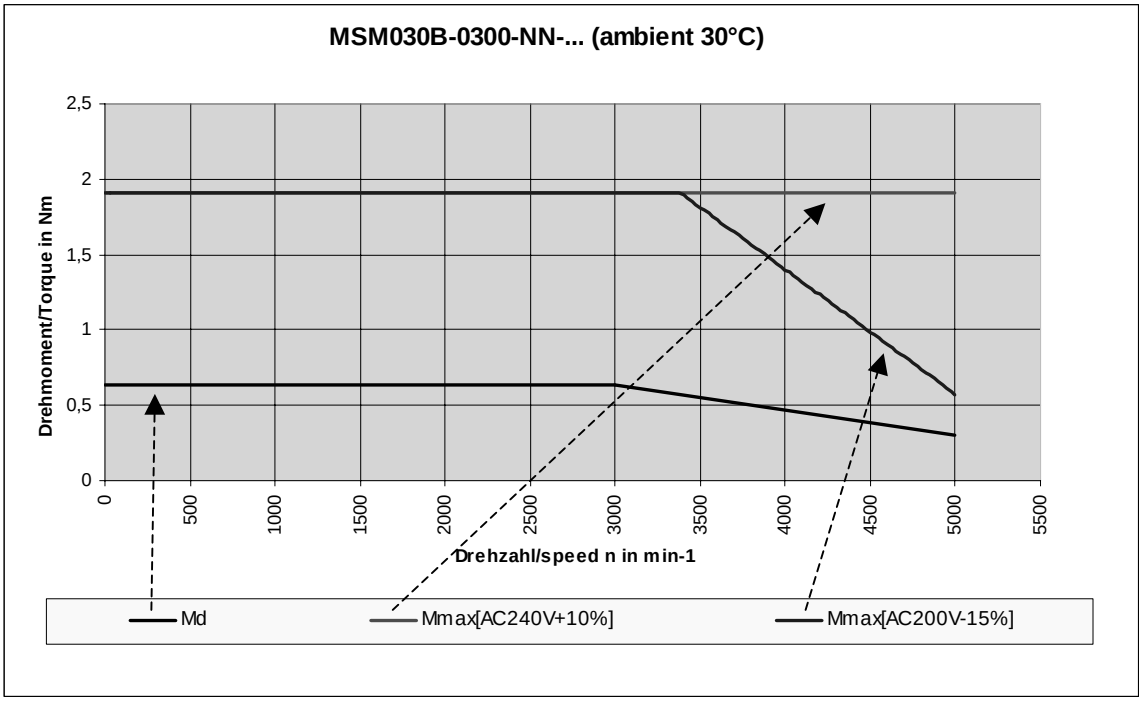

Fig. 8-17: MSM030B torque characteristic

Characteristic: Torque - Temperature

Higher ambient temperatures cause a derating of the available torque:

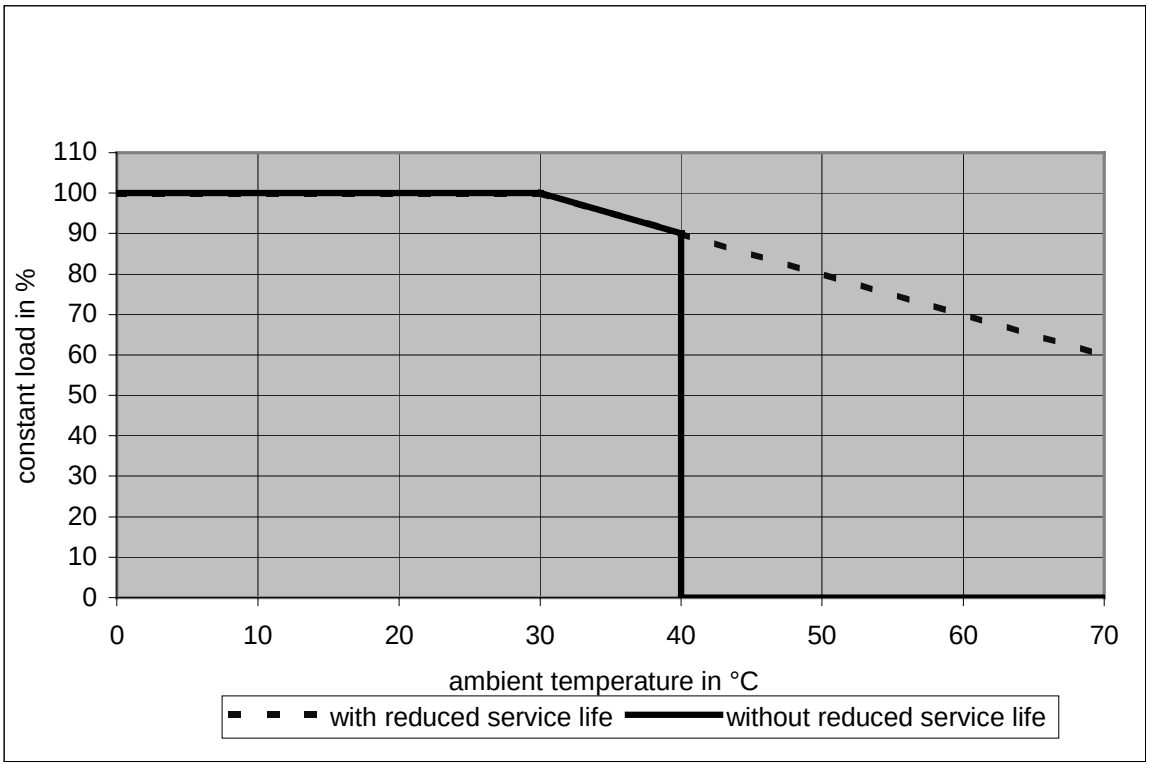

Fig. 8-18: MSM030B utilization depending on the ambient temperature

Courtesy of CMA/Flodyne/Hydradyne ▪ Motion Control ▪ Hydraulic ▪ Pneumatic ▪ Electrical ▪ Mechanical ▪ (800) 426-5480 ▪ www.cmafh.com

8.6 MSM030C

Dimensions

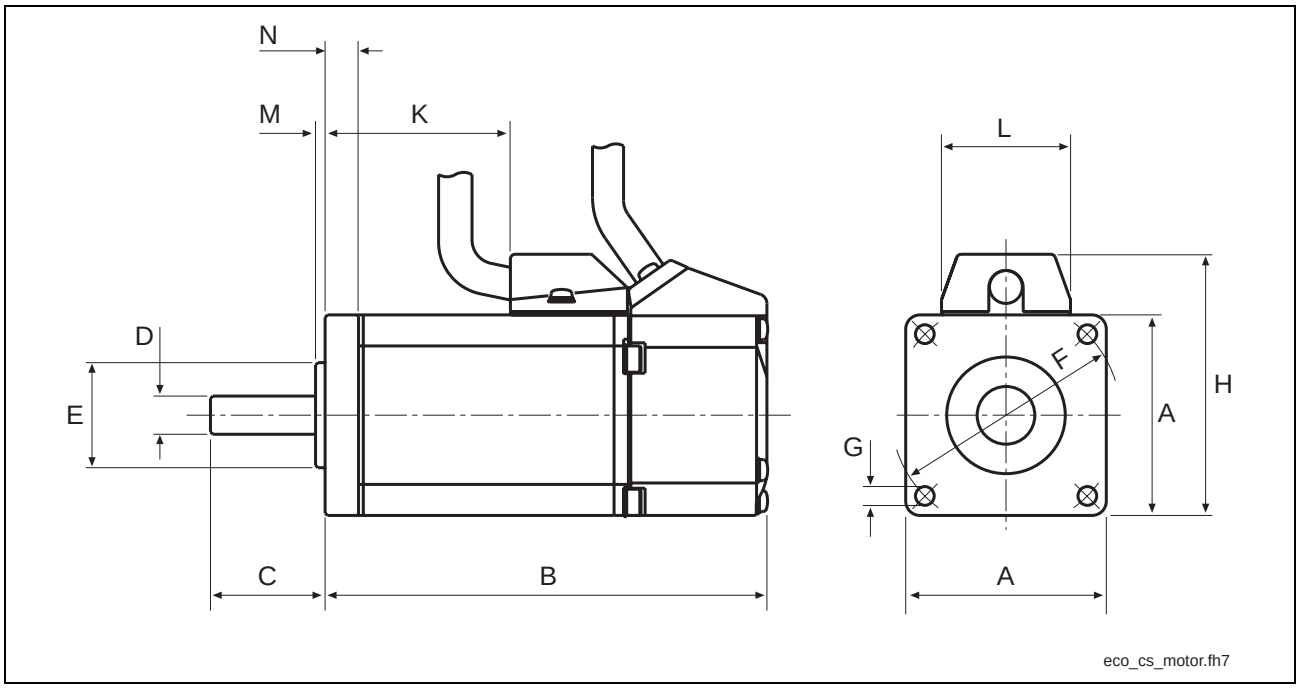

Fig. 8-19: Front and side view of a motor

Motor type	A	B	C	D	E	F	G	H	K	L	M	N
without brake with incremental encoder	60	123.5	30	∅14^{h6}	∅ 50^{h7}	∅ 70	∅ 4.5	73	61.5	27	3	7
with brake with incremental encoder	60	156.5	30	∅14^{h6}	∅ 50^{h7}	∅ 70	∅ 4.5	73	61.5	27	3	7
without brake with absolute encoder	60	138.5	30	∅14^{h6}	∅ 50^{h7}	∅ 70	∅ 4.5	73	61.5	27	3	7
with brake with absolute encoder	60	171.5	30	∅14^{h6}	∅ 50^{h7}	∅ 70	∅ 4.5	73	61.5	27	3	7

all data in mm

Fig. 8-20: Dimensions

Courtesy of CMA/Flodyne/Hydradyne ▪ Motion Control ▪ Hydraulic ▪ Pneumatic ▪ Electrical ▪ Mechanical ▪ (800) 426-5480 ▪ www.cmafh.com

Key

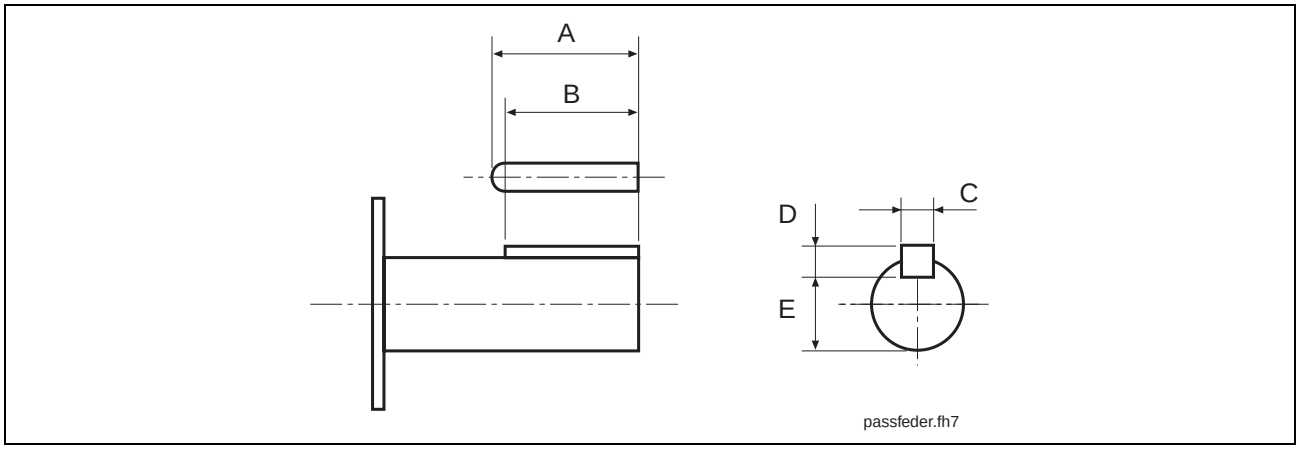

A	B	C	D	E
25	22.5	5h9	5	11

all data in mm

Fig. 8-21: Key

Cables at the Motor

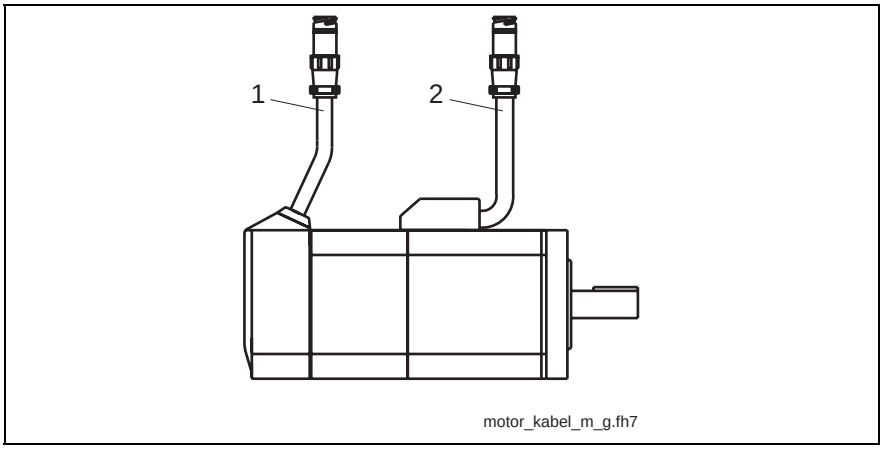

1: encoder cable
2: motor cable

Fig. 8-22: Cables at the motor

Length of cables (motor ↔ connector):

- motor cable: 200 mm (+70 mm connector)
- encoder cable: 220 mm (+62 mm connector)

Motor Cable See chapter 10.1

Encoder Cable See chapter 10.1

Courtesy of CMA/Flodyne/Hydradyne ▪ Motion Control ▪ Hydraulic ▪ Pneumatic ▪ Electrical ▪ Mechanical ▪ (800) 426-5480 ▪ www.cmafh.com

Technical Data

Designation	Symbol	Unit	Value
cooling type			natural convection
motor overtemperature		K	80 at 30 °C ambient temperature (max. 130 °C internal temperature; max. 110 °C surface temperature)
Electric parameters			
continuous torque at standstill	M_{dN}	Nm	1.2
continuous current at standstill	I_{dN}	A	2.3
peak current	I_{max}	A	7.4
torque constant at 20 °C [1])	K_m	Nm/A	0.54 ±10%
voltage constant at 20 °C	$K_{E(eff)}$	V/1000min^{-1}	32.6 ±10%
winding resistance at 20 °C	R_{12}	Ω	4.3 ±7%
winding inductance	L_{12}	mH	17 ±10%
number of pole pairs	p	-	4
Rated data [2])			
rated speed	n_N	min^{-1}	3000
rated torque	M_N	Nm	1.2
rated current	I_N	A	2.3
rated power	P_N	W	377
rated voltage	U_N	V	132
rated frequency	f_N	Hz	200
Mechanical parameters			
rotor inertia [3])	J_M	kgm²	0.17 x 10^{-4} (0.2 x 10^{-4})
theoretical maximum torque	M_{max}	Nm	3.8
minimum power strand cross section [4])	S	mm^2	0.75
thermal time constant	T_{th}	s	25
maximum speed	n_{max}	min^{-1}	5000
motor mass [3])	m	kg	1.5 (1.9)
allowed storage and transport temp.	T_L	°C	-20 ... +80
allowed ambient temperature [6])	T_{um}	°C	+0 ... +40
max. installation altitude [6])	h	m	1000
degree of protection [7])			IP65 (housing); IP40 (output shaft)
insulation class (according to DIN VDE0530 part 1)			B
housing painting			none

[1]) K_m is to be used for calculations with crest values (I_{dN}, I_{max}). For calculations with root-mean-square values (rated data), the torque constant K_m must be multiplied by a factor of $\sqrt{2}$.
[2]) Values determined according to EN 60034-1. Current and voltage specified as root-mean-square values.
[3]) Value in brackets valid for motor with holding brake.
[4]) Applicable to REXROTH cables. Rated according to VDE0298-4 (1992) and installation type B2 according to EN 60204-1 (1993) at an ambient temperature of 40 °C.
[5]) Without blower unit:
[6]) If the limits specified are exceeded, the performance data must be reduced, if necessary.
[7]) Provided the power and encoder cables are mounted properly.

Fig. 8-23: MSM030C technical data

Courtesy of CMA/Flodyne/Hydradyne ▪ Motion Control ▪ Hydraulic ▪ Pneumatic ▪ Electrical ▪ Mechanical ▪ (800) 426-5480 ▪ www.cmafh.com

Characteristic: Torque - Speed

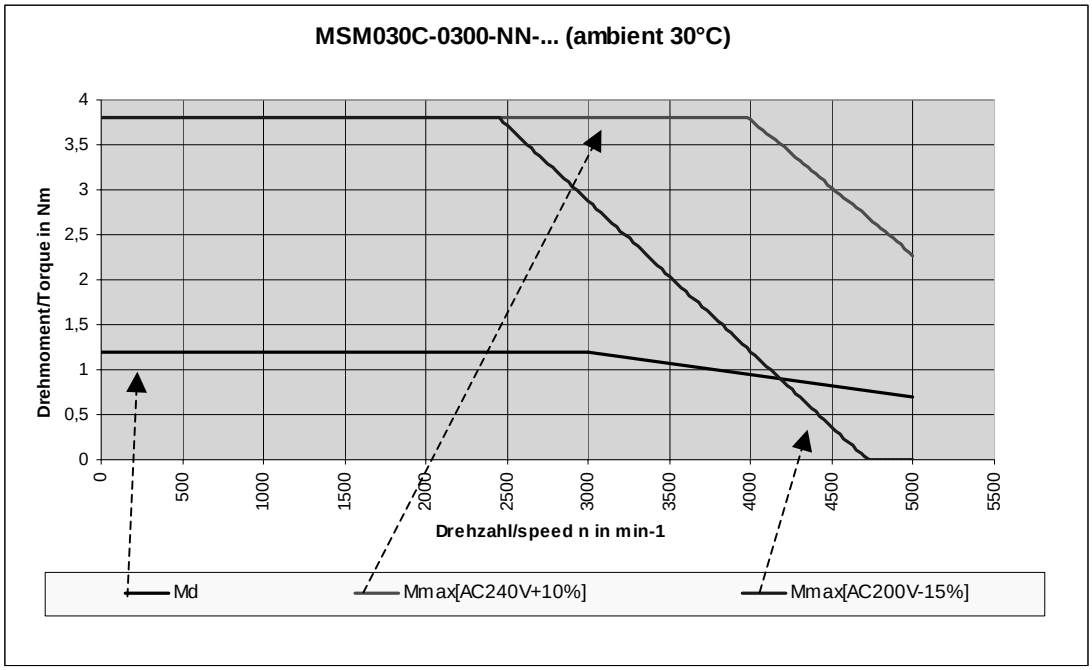

Fig. 8-24: MSM030C torque characteristic

Characteristic: Torque - Temperature

Higher ambient temperatures cause a derating of the available torque:

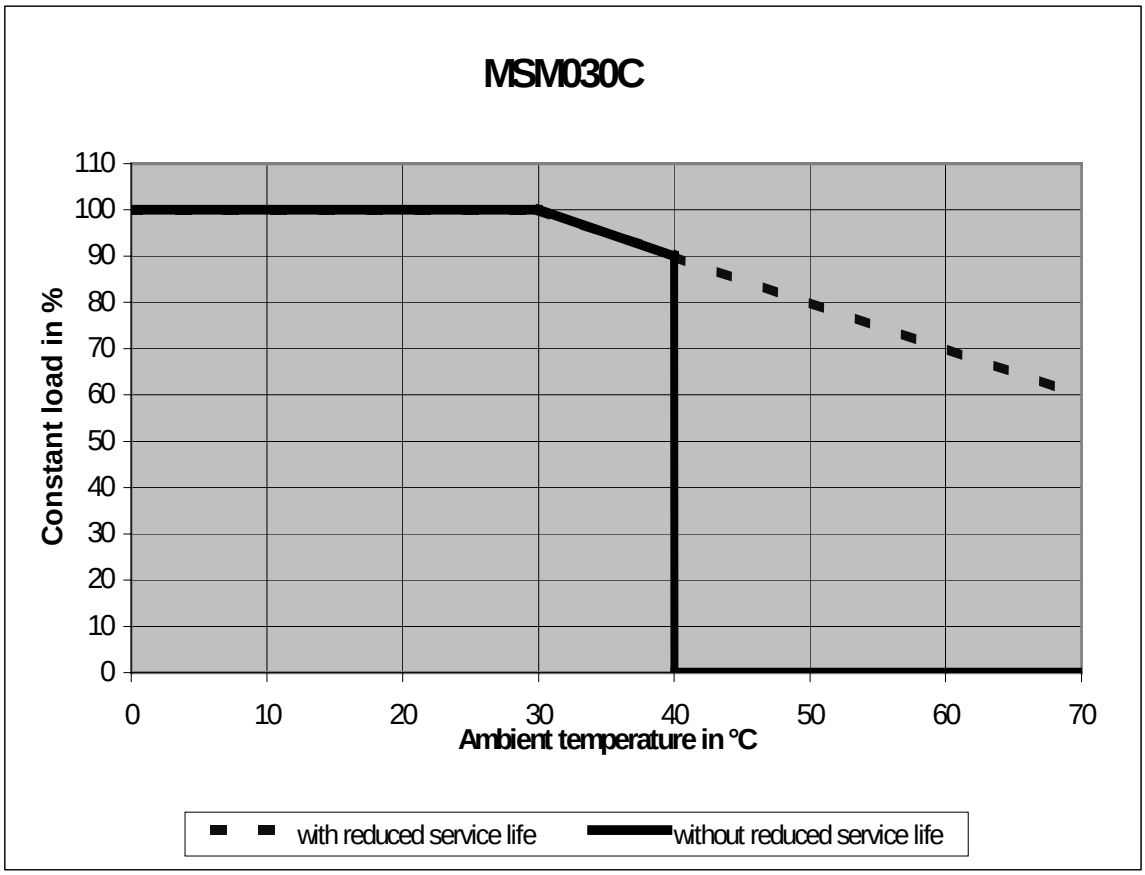

Fig. 8-25: MSM030C utilization depending on the ambient temperature

Courtesy of CMA/Flodyne/Hydradyne ▪ Motion Control ▪ Hydraulic ▪ Pneumatic ▪ Electrical ▪ Mechanical ▪ (800) 426-5480 ▪ www.cmafh.com

8.7 MSM040B

Dimensions

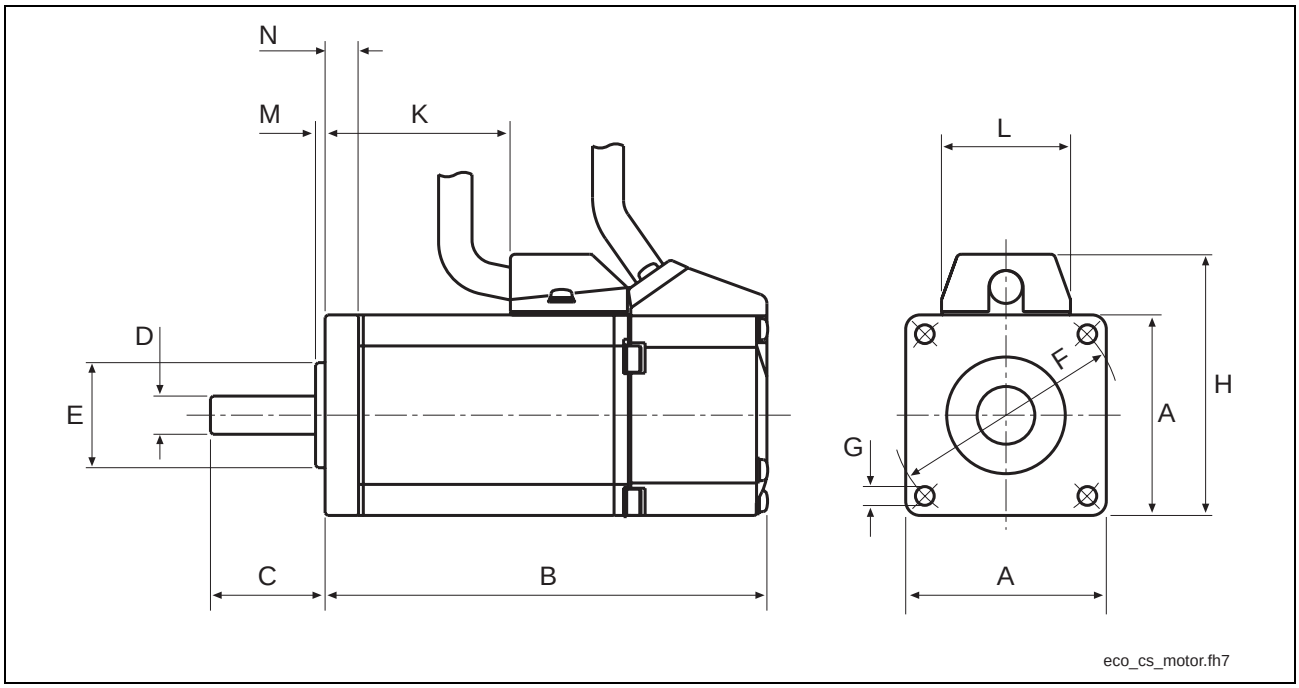

Fig. 8-26: Front and side view of a motor

Motor type	A	B	C	D	E	F	G	H	K	L	M	N
without brake with incremental encoder	80	142.5	35	∅19^{h6}	∅ 70^{h7}	∅ 90	∅ 6.0	93	76.0	27	3	8
with brake with incremental encoder	80	176.5	35	∅19^{h6}	∅ 70^{h7}	∅ 90	∅ 6.0	93	76.0	27	3	8
without brake with absolute encoder	80	157.5	35	∅19^{h6}	∅ 70^{h7}	∅ 90	∅ 6.0	93	76.0	27	3	8
with brake with absolute encoder	80	191.5	35	∅19^{h6}	∅ 70^{h7}	∅ 90	∅ 6.0	93	76.0	27	3	8

all data in mm

Fig. 8-27: Dimensions

Courtesy of CMA/Flodyne/Hydradyne ▪ Motion Control ▪ Hydraulic ▪ Pneumatic ▪ Electrical ▪ Mechanical ▪ (800) 426-5480 ▪ www.cmafh.com

Key

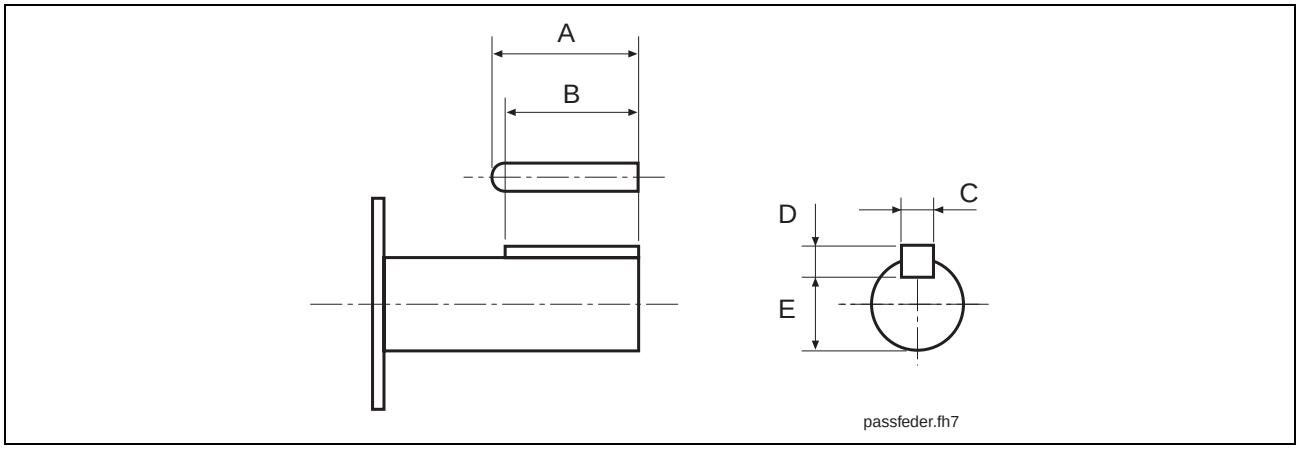

A	B	C	D	E
25	22	6h9	6	15.5

all data in mm

Fig. 8-28: Key

Cables at the Motor

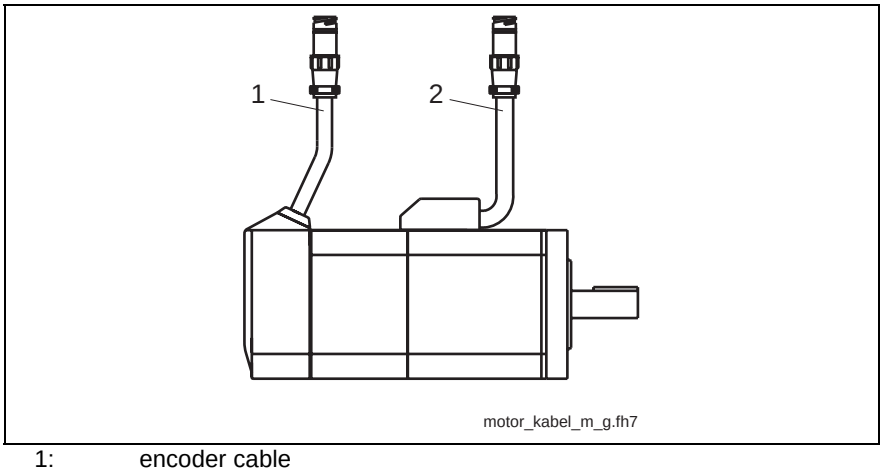

1: encoder cable
2: motor cable

Fig. 8-29: Cables at the motor

Length of cables (motor ↔ connector):

- motor cable: 200 mm (+70 mm connector)
- encoder cable: 220 mm (+62 mm connector)

Motor Cable See chapter 10.1

Encoder Cable See chapter 10.1

Courtesy of CMA/Flodyne/Hydradyne ▪ Motion Control ▪ Hydraulic ▪ Pneumatic ▪ Electrical ▪ Mechanical ▪ (800) 426-5480 ▪ www.cmafh.com

Technical Data

Designation	Symbol	Unit	Value
cooling type			natural convection
motor overtemperature		K	70 at 40 °C ambient temperature (max. 130 °C internal temperature; max. 110 °C surface temperature)
Electric parameters			
continuous torque at standstill	M_{dN}	Nm	2.4
continuous current at standstill	I_{dN}	A	4.3
peak current	I_{max}	A	12.9
torque constant at 20 °C [1])	K_m	Nm/A	0.61 ±10%
voltage constant at 20 °C	$K_{E(eff)}$	$V/1000min^{-1}$	37.3 ±10%
winding resistance at 20 °C	R_{12}	Ω	1.5 ±7%
winding inductance	L_{12}	mH	10.7 ±10%
number of pole pairs	p	-	4
Rated data [2])			
rated speed	n_N	min^{-1}	3000
rated torque	M_N	Nm	2.4
rated current	I_N	A	4.3
rated power	P_N	W	754
rated voltage	U_N	V	132
rated frequency	f_N	Hz	200
Mechanical parameters			
rotor inertia [3])	J_M	kgm²	0.67×10^{-4} (0.75×10^{-4})
theoretical maximum torque	M_{max}	Nm	7.1
minimum power strand cross section [4])	S	mm^2	0.75
thermal time constant	T_{th}	s	50
maximum speed	n_{max}	min^{-1}	4500
motor mass [3])	m	kg	3.1 (3.8)
allowed storage and transport temp.	T_L	°C	-20 ... +80
allowed ambient temperature [6])	T_{um}	°C	+0 ... +40
max. installation altitude [6])	h	m	1000
degree of protection [7])			IP65 (housing); IP40 (output shaft)
insulation class (according to DIN VDE0530 part 1)			B
housing painting			none

[1]) K_m is to be used for calculations with crest values (I_{dN}, I_{max}). For calculations with root-mean-square values (rated data), the torque constant K_m must be multiplied by a factor of $\sqrt{2}$.
[2]) Values determined according to EN 60034-1. Current and voltage specified as root-mean-square values.
[3]) Value in brackets valid for motor with holding brake.
[4]) Applicable to REXROTH cables. Rated according to VDE0298-4 (1992) and installation type B2 according to EN 60204-1 (1993) at an ambient temperature of 40 °C.
[5]) Without blower unit:
[6]) If the limits specified are exceeded, the performance data must be reduced, if necessary.
[7]) Provided the power and encoder cables are mounted properly.

Fig. 8-30: MSM040B technical data

Courtesy of CMA/Flodyne/Hydradyne ▪ Motion Control ▪ Hydraulic ▪ Pneumatic ▪ Electrical ▪ Mechanical ▪ (800) 426-5480 ▪ www.cmafh.com

Characteristic: Torque - Speed

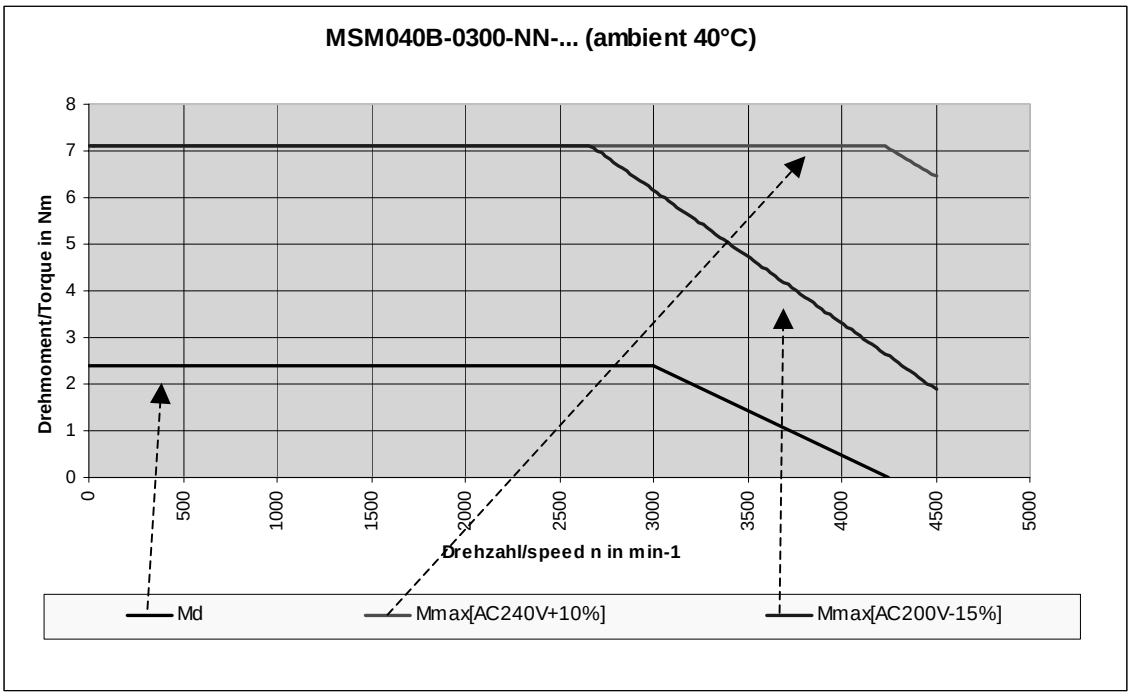

Fig. 8-31: MSM040B torque characteristic

Characteristic: Torque - Temperature

Higher ambient temperatures cause a derating of the available torque:

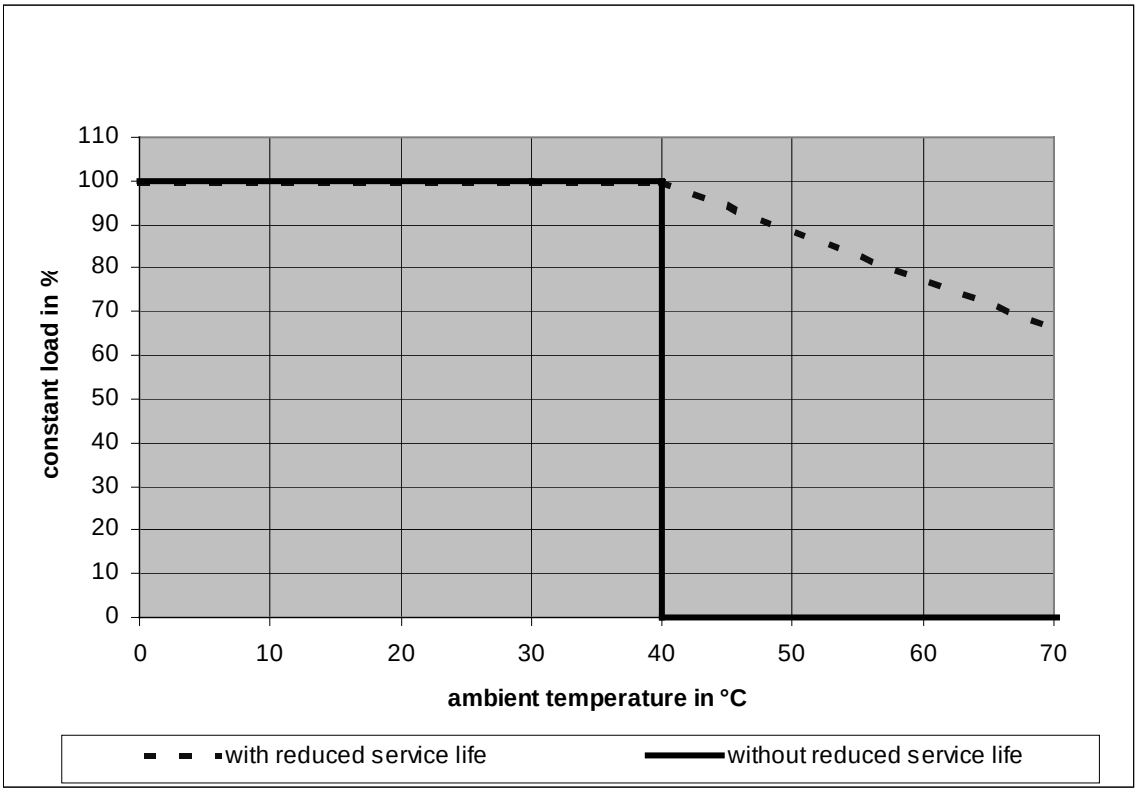

Fig. 8-32: MSM040B utilization depending on the ambient temperature

Courtesy of CMA/Flodyne/Hydradyne ▪ Motion Control ▪ Hydraulic ▪ Pneumatic ▪ Electrical ▪ Mechanical ▪ (800) 426-5480 ▪ www.cmafh.com

8.8 Application Instructions

Operating Conditions

Setup Height and Ambient Temperature

Nominal data

The performance data specified for the motors apply in case of the following conditions:

- Ambient Temperature of 0 ºC up to +40 ºC
- Setup Height 0 m up to 1000 m above MSL.

Exceeding the nominal data
Derating curves

If you intend to use motors above these ranges, you must take the “utilization factors” into consideration. This reduces the performance data.

Note: MSM motors don't have a temperature sensor. Thus, in case of overload the windings of the motors can be destroyed.

Vibration and Shock Loads

MSM motors can carry loads, such as are typically occurring in case of presses, punches, or press inlets, only if they are attached in a shock-absorbed or shock-decoupled way. The construction of such attachments must be checked in isolated cases.

MSM motors, if used stationary and weather-resistant, may be operated under the following conditions:

- Longitudinal motor axis: according to class 3M1
- Transverse motor axis: according to class 3M4

⇒ Ensure that the limits specified in the following tables for storage, transport, and operation of the MSM motors are not exceeded.

Vibration sinus in operation according to EN 60068-2-6:	Values
Amplitude and frequency	0.15 mm (peak-peak) at 10...57 Hz
Acceleration and frequency	1 g at 57...150 Hz
Tolerance	±15 %

Fig. 8-33: Vibration sinus

Vibration distortion (Random) in operation according to IEC 68-2-36	Values
Frequency	20 ... 150 Hz
Spectral acceleration density amplitude	0.005 g^2/Hz
Tolerance	± 3 dB
Virtual value (r.m.s.) of the total acceleration	1.0 g

Abb. 8-34: Vibration distortion

Courtesy of CMA/Flodyne/Hydradyne ▪ Motion Control ▪ Hydraulic ▪ Pneumatic ▪ Electrical ▪ Mechanical ▪ (800) 426-5480 ▪ www.cmafh.com

Degree of protection

The type of protection is defined by the identification symbol IP (International Protection) and two characteristic numerals specifying the degree of protection.

The **first characteristic numeral** defines the degree of protection against contact and penetration of foreign particles. The **second characteristic numeral** defines the degree of protection against water.

First characteristic numeral	Degree of protection
6	Protection against penetration of dust (dust-proof); complete shock protection
Second characteristic numeral	Degree of protection
7	Protection against harmful effects if temporarily immersed in water
5	Protection against a water jet from a nozzle directed against the housing from all directions (jet water)

Fig. 8-35: IP degrees of protection

Tests regarding the second characteristic numeral must be performed using fresh water. If cleaning is effected using high pressure and/or solvents, coolants, or penetrating oils, it might be necessary to select a higher degree of protection.

The design of the MSM motors complies with the following degrees of protection according to DIN VDE 0470, Part 1, ed. 11/1992 (EN 60 529):

Motor ranges	Degree of protection	Remark
Motor housing, power and feedback connectors (if mounted properly only)	IP 65	Standard design
motor shaft	IP40	Standard design

Fig. 8-36: Ranges of IP degrees of protection for the motors

Courtesy of CMA/Flodyne/Hydradyne ▪ Motion Control ▪ Hydraulic ▪ Pneumatic ▪ Electrical ▪ Mechanical ▪ (800) 426-5480 ▪ www.cmafh.com

Design and Installation Positions

Permissible types of installation		
Description	**Sketch**	**Setup**
IM B5	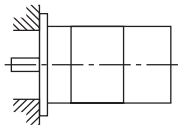	Flange attached on the drive side of the flange
IM V1	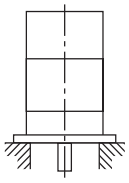	Flange attached on the drive side of the flange; drive side pointing down
IM V3	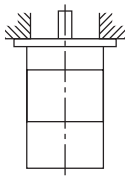	Flange attached on the drive side of the flange; drive side pointing up

Fig. 8-37: Mounting position

Courtesy of CMA/Flodyne/Hydradyne ▪ Motion Control ▪ Hydraulic ▪ Pneumatic ▪ Electrical ▪ Mechanical ▪ (800) 426-5480 ▪ www.cmafh.com

Housing Materials

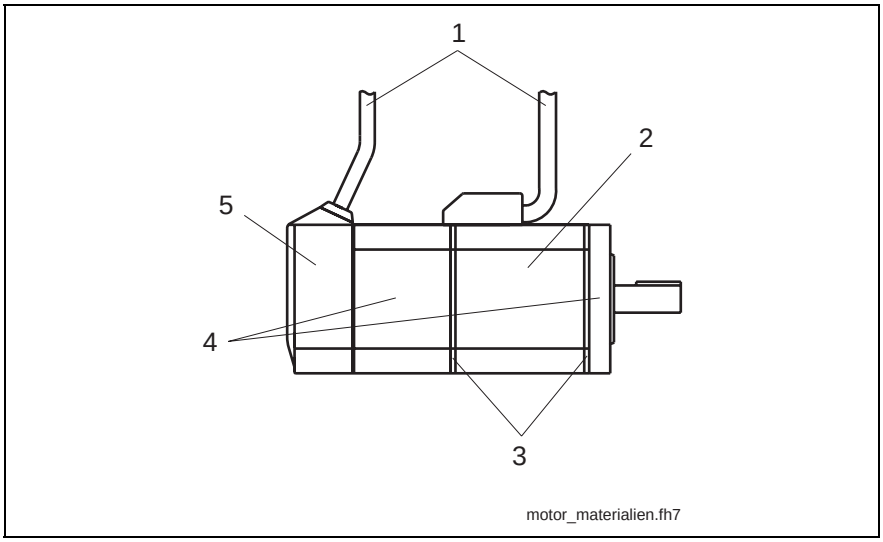

Fig. 8-38: Housing materials

No.	Material
1	polyvinyl chloride resin; (oil resistance: according to standard "JIS C 3005" the 20th clause; test conditions: oil temperature: 70 °C; test time (cable in oil): 4 hours; oil: machine oil 46 (from GENERAL))
2	aluminum; anodized
3	rubber
4	die-cast aluminum; bare
5	polyamide 46 (nylon 46)

Fig. 8-39: Materials

Courtesy of CMA/Flodyne/Hydradyne ▪ Motion Control ▪ Hydraulic ▪ Pneumatic ▪ Electrical ▪ Mechanical ▪ (800) 426-5480 ▪ www.cmafh.com

Holding Brake

Optional. Required for holding the servo axis when the machine is in the de-energized state.

DANGER

Hazardous movements! Persons endangered by falling or descending axes!

⇒ The serially delivered motor holding brake does not suffice to ensure overall personal protection!

⇒ Ensure personal protection by superordinate failsafe measures:

⇒ Block off the hazardous range by means of a safety fence or a safety screen.

⇒ Additionally secure vertical axes to prevent them from falling or descending after having switched off the motor, for instance as follows:

– lock the vertical axis mechanically,

– provide an external braking / collecting / clamping device, or

– ensure proper weight compensation of the axis.

Operating Principle

The holding brake is operated according to the “electrically releasing” principle. In the de-energized state, a magnetic force acts upon the brake armature disk. This causes the brake to close and to hold the axis.

By applying 24 VDC, the permanent magnetic field is compensated by the electrically generated magnetic field: the brake opens.

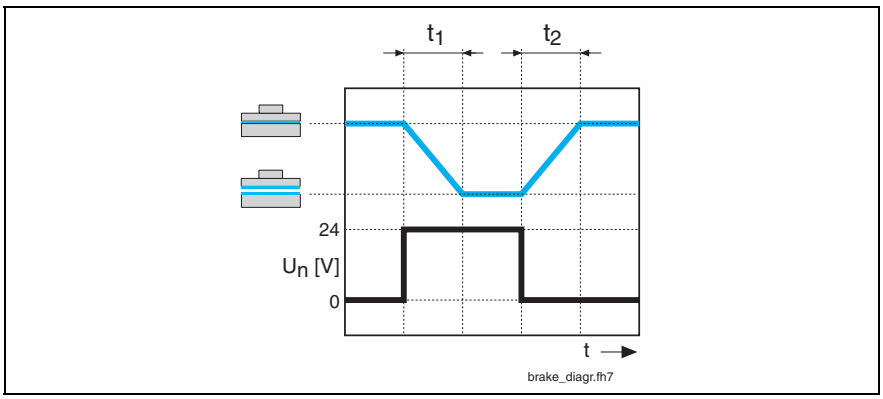

t_1: Connection time (100 W: 25 ms; 200/400 W: 50 ms; 750 W: 60 ms)
t_2: Disconnection time (100 W: 25 ms; 200/400 W: 50 ms; 750 W: 60 ms)

Fig. 8-40: Holding brake diagram

The holding brake is activated by the drive controller. This ensures the proper on and off order in all of the operating states.

Note: A premature wear and tear of the holding brake is possible!

The holding brake wears after approx. 3000 motor revolutions in closed state. For that reason, do not use the holding brake as a system brake to stop a moving axis! This is permitted for EMERGENCY STOP situations only.

Courtesy of CMA/Flodyne/Hydradyne ▪ Motion Control ▪ Hydraulic ▪ Pneumatic ▪ Electrical ▪ Mechanical ▪ (800) 426-5480 ▪ www.cmafh.com

Please observe the instructions on putting the holding brakes into operation described in the chapter entitled “Startup, Operation, and Maintenance”.

Data

Designation	Symbol	Unit	Holding brake data		
			MSM020B	MSM030B; MSM030C	MSM040B
holding torque	M_4	Nm	0.29	1.27	2.45
tripping voltage		V	> 1	> 1	> 1
rated voltage	U_N	V	24 ±10%	24 ±10%	24 ±10%
rated current	I_N	A	0.26	0.36	0.43
moment of inertia	J_B	kgm^2	0.003	0.03	0.09
clamping delay	t_1	ms	≤ 25	≤ 50	≤ 60
release delay	t_2	ms	≤ 20	≤ 15	≤ 15
allowed braking energy (once per braking operation)		J	39.2	137	196
allowed braking energy (total)		J	4.9×10^3	44.1×10^3	147×10^3
allowed angular acceleration		rad/s^2	10000	10000	10000

all data based on an ambient temperature of 20 °C

Fig. 8-41: Technical data of holding brake

- The above values are typical values, except for holding torque, tripping voltage and rated voltage.
- When the motor was moved the play of the brake is ±1° or less.
- The power supply of the holding brake is realized externally.
- Maximum number of acceleration and braking processes with the highest allowed angular acceleration: 10 million.

Output Shaft and Motor Bearing

Plain shaft

The standard design recommended for MSM motors provides a friction-locked shaft-hub connection without play and excellent running smoothness. Use clamping sets, clamping sleeves or clamping elements to couple the machine elements to be driven.

Output shaft with key

The optional key permits keyed transmission of torques with constant direction, with low requirements for the shaft-hub connection.

Courtesy of CMA/Flodyne/Hydradyne ▪ Motion Control ▪ Hydraulic ▪ Pneumatic ▪ Electrical ▪ Mechanical ▪ (800) 426-5480 ▪ www.cmafh.com

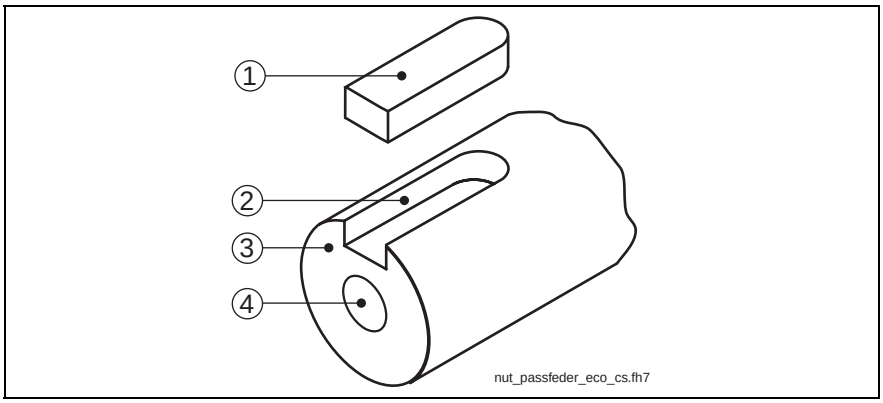

(1): Key
(2): Keyway
(3): Motor shaft
(4): Centering hole

Fig. 8-42: MSM output shaft with Key

The machine elements to be driven must additionally be secured in axial direction via the centering hole on the end face.

CAUTION

Shaft damage! In case of intense reversing operation, the seat of the key may deflect. Increasing deformations in this area can then lead to a break of the shaft!

⇒ Preferably, plain output shafts should be used.

Balancing with the complete key

MSM motors are balanced with the **complete** key. Hence, the machine element to be driven must be balanced without key.

Modifications to the keys may only be made by the user himself and on his own responsibility. Rexroth do not give any warranty for modified keys or motor shafts.

Courtesy of CMA/Flodyne/Hydradyne ▪ Motion Control ▪ Hydraulic ▪ Pneumatic ▪ Electrical ▪ Mechanical ▪ (800) 426-5480 ▪ www.cmafh.com

Bearings and Shaft Load

During operation, both radial and axial forces act upon the motor shaft and the motor bearings. The construction of the machine and the attachment of driving elements on the shaft side must be adjusted to one another to ensure that the load limits specified are not exceeded.

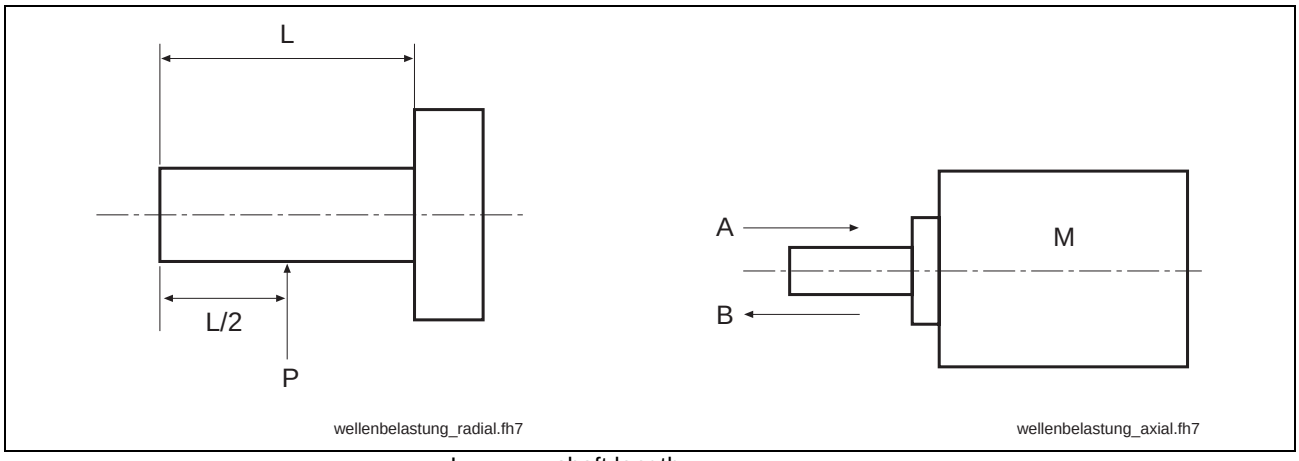

L: shaft length
P: point of action of the radial force
A, B: directions of the axial force

The following table shows the allowed shaft load of the individual motors.

Motor	During assembly			In operation	
	radial force	axial force		radial force	axial force
		direction A	direction B		
MSM020B	147	88.2	117.6	68.6	58.8
MSM030B; MSM030C	392	147	196	245	98
MSM040B	686	294	392	392	147

all data in N

Fig. 8-43: Allowed shaft load

Maximum permissible radial force F_{radial_max}

The maximum permissible radial force F_{radial_max} depends on the following factors:

- Shaft break load
- Point of force application
- Shaft design (plain; with keyway)

Permissible radial force F_{radial}

The permissible radial force F_{radial} depends on the following factors:

- Arithmetic mean speed (n_{mean})
- Point of force application
- Bearing service life

Permissible axial force F_{axial}

The maximum permissible axial force F_{axial} is proportional to the radial force. Please refer to the section entitled “Shaft load” in the technical data for the proportionality factor.

Courtesy of CMA/Flodyne/Hydradyne ▪ Motion Control ▪ Hydraulic ▪ Pneumatic ▪ Electrical ▪ Mechanical ▪ (800) 426-5480 ▪ www.cmafh.com

Bearing service life

Nominal bearing service life

If the MSM motors are operated within the limits specified for radial and axial loads, the nominal service life of the bearings is as follows: **L_{10h} = 20.000** operating hours

In other cases, the bearing service life is reduced as follows:

$$L_{10h} = \left(\frac{F_{radial}}{F_{radial_ist}} \right)^3 \cdot 20000$$

L_{10h}: (Bearing service life according to ISO 281, ed. 12/1990)
F_{radial}: Determined permissible radial force in N (Newton)
F_{radial_ist}: Actually acting radial force in N (Newton)

Fig. 8-44: Calculation of the bearing service life L_{10h} if the permissible radial force F_{radial} is exceeded

Note: Under no circumstances may the actually acting radial force F_{radial_ist} be higher than the maximum permissible radial force F_{radial_max}.

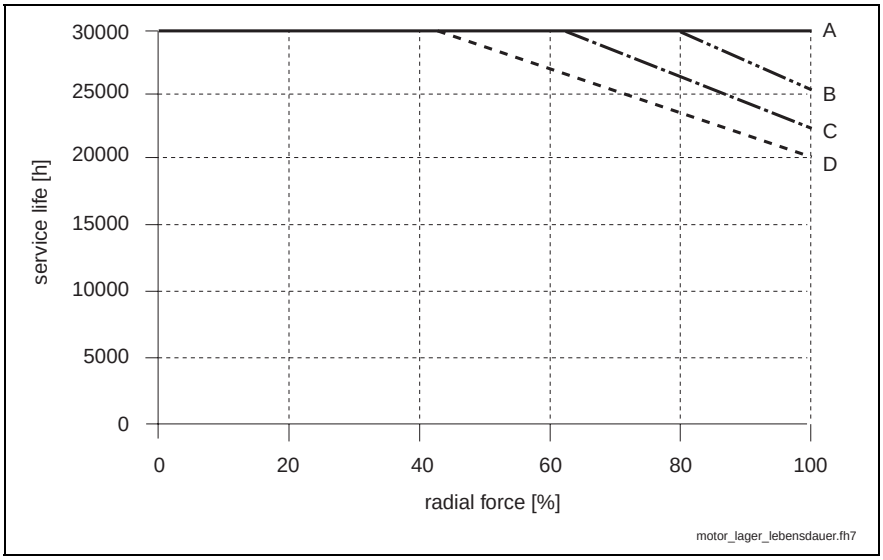

A: at 70% of maximum permissible axial force
B: at 80% of maximum permissible axial force
C: at 90% of maximum permissible axial force
D: at 100% of maximum permissible axial force

Abb. 8-45: Bearing service life depending on radial and axial force

Courtesy of CMA/Flodyne/Hydradyne ▪ Motion Control ▪ Hydraulic ▪ Pneumatic ▪ Electrical ▪ Mechanical ▪ (800) 426-5480 ▪ www.cmafh.com

Encoder

To control the motor speed and/or to position the motor, the drive controller requires information on the current motor position.

To achieve this, the integrated encoder system (motor encoder) makes the appropriate signals available to the drive controller. The drive controllers are capable of transmitting the positional value thus determined to a superordinate CNC or PLC.

Encoder data memory

The encoder electronics is equipped with a data memory where the motor type name, the control loop parameters and the motor parameters are filed.

These data are read by the digital intelligent drive controllers by Rexroth. This ensures

- quick and easy startup,
- adjustment between the motor and the drive controller without the risk of damage to the motor.

Following encoder variants are available for MSM motors:

Option	Encoder type	Measurement method	System precision	Position input type
CO	Incremental encoder	inductive	±2 angular minutes	relative
MO	Absolute encoder	optical	±2 angular minutes	absolute

Fig. 8-46: MSM motor encoder

Courtesy of CMA/Flodyne/Hydradyne ▪ Motion Control ▪ Hydraulic ▪ Pneumatic ▪ Electrical ▪ Mechanical ▪ (800) 426-5480 ▪ www.cmafh.com

Incremental Encoder

Provided for relative indirect position detection.

Note: Characteristics of the incremental encoder: After a voltage failure or after the first POWER ON, the axis must first always be moved to its home position, before the processing can begin.

Designation	Value	Note
type	square-wave	frequency: max. 250 kHz
resolution	10000 (2500 pulses/revolution)	1 zero pulse per revolution
output format	binary	
increasing direction	counterclockwise	as viewed from the encoder shaft end
operating temperature	70 °C	
baud rate	2.5 MBaud	
accumulative pitch error	+-0° 00' 80''	
encoder interface (to drive controller)	serial; baud rate 2.5 MBaud	

Fig. 8-47: Data of incremental encoder

Encoder Cable See chapter 10.1

Rexroth Bosch Group

Courtesy of CMA/Flodyne/Hydradyne ▪ Motion Control ▪ Hydraulic ▪ Pneumatic ▪ Electrical ▪ Mechanical ▪ (800) 426-5480 ▪ www.cmafh.com

Absolute Encoder

Provided for absolute indirect position detection within 65536 motor revolutions. Replaces separate absolute value encoders at the motor.

Note: The absolute axis position at this encoder variety still exists because of the battery back-up also after power shut down. If you disconnect the motor from the drive controller, you will lose the absolute axis position after approx. 1 minute.

Power supply

Designation	Value	Note
main power supply	5 V ±5%	
battery	3.6 V	Battery allows: • holding data (in multiturn operation) • multiturn operation when power supply fails See also chapter "Additional Components" → "Accessories" → "SUP-E03-DKC*CS-BATTRY" Changing battery: see page 8-45

Fig. 8-48: Power supply

Courtesy of CMA/Flodyne/Hydradyne ▪ Motion Control ▪ Hydraulic ▪ Pneumatic ▪ Electrical ▪ Mechanical ▪ (800) 426-5480 ▪ www.cmafh.com

Data for Single-Turn Signals

Designation	Value	Note
absolute values total	33 bit	
resolution	17 bit (131072 pulses per revolution) -> 0.00275°/imp	accuracy is 8 bit
maximum rotational speed (in normal operating mode)	6000 rpm	
maximum angular acceleration (in normal operating mode)	80000 rad/s^2	
output format	binary	
increasing direction	counterclockwise	as viewed from the encoder shaft end
accumulative pitch error	±80" (±8LSB)	
adjacent pitch error	±40" (±4LSB)	
accuracy in case the main power supply is switched on repeatedly (within a revolution of 3.5° after switching on power)	±80" (±8LSB)	after the shaft rotates by more than 3.5°, the tolerance increases to ±5LSB due to the increased correction precision
encoder interface (to drive controller)	serial; baud rate 2,5 MBaud	

data based on a temperature of 25 °C

Fig. 8-49: Data for single-turn signals

Rexroth Bosch Group

Courtesy of CMA/Flodyne/Hydradyne ▪ Motion Control ▪ Hydraulic ▪ Pneumatic ▪ Electrical ▪ Mechanical ▪ (800) 426-5480 ▪ www.cmafh.com

Data for Multi-Turn Signals

Designation	Value	Note
resolution	1 C/T	
counter for multi turns	16 Bit	0 - 65535
maximum rotational speed (in normal operating mode)	6000 rpm	
maximum rotational speed (in power-off mode, timer)	6000 rpm	time of the power-off timer: 5 seconds calculated value: 7031 rpm
maximum rotational speed (in power-off mode, power-off operation)	6000 rpm	
maximum angular acceleration (in normal operating mode)	80000 rad/s^2	
maximum angular acceleration (in power-off mode, timer)	80000 rad/s^2	
maximum angular acceleration (in power-off mode, power-off operation)	4000 rad/s^2	
output format	binary	
increasing direction	counterclockwise	as viewed from the encoder shaft end
data rate time (by means of integrated capacitor)	1 hour (at delivery) 15 minutes (after 10 years)	calculated value (the service life of the capacitor basically depends on the ambient temperature and the operating voltage)

data based on a temperature of 25 °C

Fig. 8-50: Data for multi-turn signals

Encoder Cable See chapter 10.1

Encoder service life

Note**:** If the MSM encoders are operated within the limits specified data (ambient temperature: max. 70 °C; rated speed: 3000 min^{-1}) the nominal service life of the encoder is as follows:
L_{10h} = 30.000 operating hours

Courtesy of CMA/Flodyne/Hydradyne ▪ Motion Control ▪ Hydraulic ▪ Pneumatic ▪ Electrical ▪ Mechanical ▪ (800) 426-5480 ▪ www.cmafh.com

Acceptances, Approvals

CE mark

Declaration of conformity

Declarations of conformity certifying the structure of and the compliance with the applicable EN standards and EC guidelines are available for all MSM motors. If necessary, these declarations of conformity can be demanded from the pertinent sales office.

The CE mark is applied to the motor type label of the MSM motors.

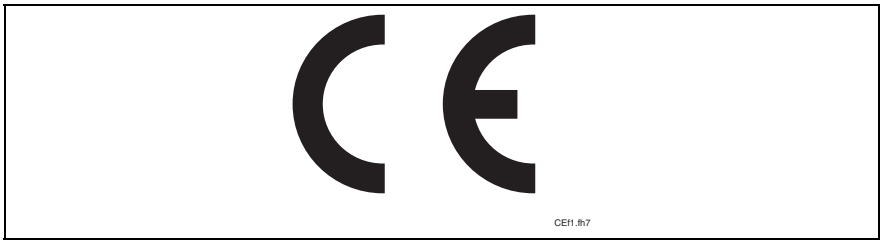

Fig. 8-51: CE mark

UR, cUR Listing

The MSM motors listed below have been presented to the UL authorities “Underwriters Laboratories Inc.®”.

- MSM020B
- MSM030B
- MSM030C
- MSM040B

The motors have been approved by the UL authorities under the file number and have been marked on their motor type label with the following sign:

Fig. 8-52: cUR mark

Courtesy of CMA/Flodyne/Hydradyne ▪ Motion Control ▪ Hydraulic ▪ Pneumatic ▪ Electrical ▪ Mechanical ▪ (800) 426-5480 ▪ www.cmafh.com

8.9 Assembly

Skilled Technical Personnel

Any work on the system and on the drives or in their vicinity may only be carried out by appropriately trained technical personnel. The owner of the system must ensure that all persons carrying out

- installation work,
- maintenance measures, or
- operation activities

on the system are adequately familiar with the contents of this documentation as well as with all warnings and precautionary measures contained therein. Qualified technical personnel must have been trained and instructed and are authorized to activate and deactivate, ground and mark electric circuits and equipment according to the safety rules and regulations. Qualified technical personnel must possess the appropriate safety equipment and have been trained in first aid.

Mounting the Motor

General for mounting

Observe all warnings and safety advices mentioned in chapter 3. This minimizes the risk of accidents and damage to the system or the motor.

Do all handling advices carefully. This ensures correct mounting and dismounting of the components.

Before mounting:

1. Procure tools, auxiliary materials, measuring and test equipment.
2. Control all components if they are clean.
3. Proof all components if they are obviously damaged. Defective components may not be mounted.
4. Ensure that mounting can be done in a dry and clean environment.
5. Ensure that the holder for the motor flange is without burrs.

If the optional holding brake is used

6. Check whether the motor brake attains the braking moment provided in the data sheet. If the brake does not attain the moment provided, first grind the brake. Then proceed as follows.

Courtesy of CMA/Flodyne/Hydradyne ▪ Motion Control ▪ Hydraulic ▪ Pneumatic ▪ Electrical ▪ Mechanical ▪ (800) 426-5480 ▪ www.cmafh.com

Mounting the MSM motors:

Mount the motor. All of the measures and tolerances specified in the dimensional sheets must be kept.

To fix the flange, we recommend to use the screws and tightening torques listed in the table below.

Motor frame size	Recommended screw size	Tightening torque [Nm]	Minimum strength [mm]
MSM020B	4x M3	78.4	5.5
MSM030B	4x M4	245	7.0
MSM030C	4x M4	245	7.0
MSM040B	4x M5	515	9.0

Fig. 15-1: Locking screws

Note: The screwed connections must be able to take up both the force due to the force of the motor and the forces acting during operation.

Connecting the Motor

After having mounted the motor mechanically as specified, proceed to connecting the motor.

DANGER

Danger to life by electric voltage! Handling within the range of live parts is extremely dangerous. Therefore:

⇒ Any work required on the electric system may only be carried out by skilled electricians. It is absolutely necessary to use electric tools.

⇒ Before starting work, the system must be de-energized and the power switch be secured against unintentional or unauthorized re-energization.

⇒ Before starting work, the appropriate measuring equipment must be used to check whether parts of the system are still applied to residual voltage (e.g. caused by capacitors, etc.). If yes, wait until these parts have discharged.

WARNING

Injuries to persons or property are possible! Interrupting or connecting live lines may cause unpredictable dangerous situations or lead to physical damage. Therefore:

⇒ Connect and disconnect plug connectors only when they are dry and de-energized.

⇒ During operation of the system, all plug connectors must be securely tightened.

Courtesy of CMA/Flodyne/Hydradyne ▪ Motion Control ▪ Hydraulic ▪ Pneumatic ▪ Electrical ▪ Mechanical ▪ (800) 426-5480 ▪ www.cmafh.com

WARNING

Risk of short-circuit caused by liquid coolant or lubricant! Short-circuits of live lines may cause unpredictable dangerous situations or lead to physical damage. Therefore:

⇒ Provide open mating sides of power plug connectors with safety caps when installing or replacing drive components, if you cannot exclude that they might be moistened with liquid coolant or lubricant.

The connection diagrams by Rexroth are exclusively intended for the preparation of system circuit diagrams!

⇒ Connect the motor as specified in the machine manufacturer's system circuit diagram!

8.10 Startup, Operation, and Maintenance

Startup

The MSM motors may be put into operation only if they have been carefully and properly mounted and if the electric connection has been properly established.

Before startup

Before putting the MSM motors into operation, the following must be checked and/or ensured:

- It must be possible to turn the rotor manually with the holding brake opened; there may be no running noise (e.g. rubbing). If necessary, the holding brake must be opened by applying a DC voltage of 24 V ±10%.
- The motor must be mounted and aligned correctly. The motor flange must be coupled to the machine structure or the gear absolutely even.
- It must be ensured that all electric connections (motor and drive controller) have been established as specified and that the cable screw unions have been tightened.
- It must be ensured that the protective conductor and/or the protective grounding have been executed properly.
- If the optional holding brake is used, its operational reliability must be ensured.
- Shock protection measures against live and moving parts must be provided for.

Startup

MSM motors may be put into operation only with Rexroth EcoDrive Cs drive controllers by Rexroth. After the connection has been properly established and the above requirements are complied with, the MSM motor can be put into operation via the drive controller.

Note: Startup of the drives is described in the Functional Description of the particular firmware MGPxxVRS. Request the corresponding product documentation from your local sales office.

Courtesy of CMA/Flodyne/Hydradyne ▪ Motion Control ▪ Hydraulic ▪ Pneumatic ▪ Electrical ▪ Mechanical ▪ (800) 426-5480 ▪ www.cmafh.com

Operation

Ensure that the ambient conditions are kept during operation.

Maintenance

Cleaning

Excessive dirt, dust or shavings may affect the function of the motors adversely, may in extreme cases even cause a failure of the motors. For that reason, you should clean

Cooling ribs

- the cooling ribs of the motors at regular intervals, in order to obtain a sufficiently large heat radiation surface. If the cooling ribs are dirty in part, sufficient heat dissipation via the environmental air is not possible any longer.

An insufficient heat radiation may have undesired consequences. The bearing service life is reduced by operation at impermissibly high temperatures (the bearing grease is decomposing). Switchoff caused by overtemperature despite operation on the basis of selected data, because the appropriate cooling is missing.

Bearings

The nominal service life of the bearings is 30.000 h, if the permissible radial and axial forces are not exceeded. Even if the bearings are loaded with higher forces to a minor degree only, their service life is affected negatively.

Connection Cable

Check connection lines for damage at regular intervals and replace them, if necessary.

Check any optionally present energy management chains (drag chains) for defects.

DANGER

Electrocution by live parts of more than 50 V!

⇒ Do not repair any connection lines provisionally. If the slightest defects are detected in the cable sheath, the system must be put out of operation immediately. Then the cable must be replaced.

Check the protective conductor connection for proper state and tight seat at regular intervals and replace it, if necessary.

Holding brake

The check can be done by means of a function (brake check) integrated in the firmware (see Functional Description).

Courtesy of CMA/Flodyne/Hydradyne ▪ Motion Control ▪ Hydraulic ▪ Pneumatic ▪ Electrical ▪ Mechanical ▪ (800) 426-5480 ▪ www.cmafh.com

Battery

Absolute encoders Motors with absolute encoders need a battery to back-up the encoder signals. The battery is set into the drive controller (Exception: Rexroth Cartesian Motion Systems (CMS)).

Warning message The drive controller observes voltage of battery and gives just in time a warning “F248 Low battery voltage".

Service life The service life of the battery depends on the ratio of switch-ON-duration to switch-OFF-duration:

$$I = \frac{t_{ON}}{t_{OFF}}$$

t_{ON}: duration, the drive controller is switched on
t_{OFF}: duration, the drive controller is switched off
I: ON/OFF ratio

Fig. 8-53: ON/OFF ratio

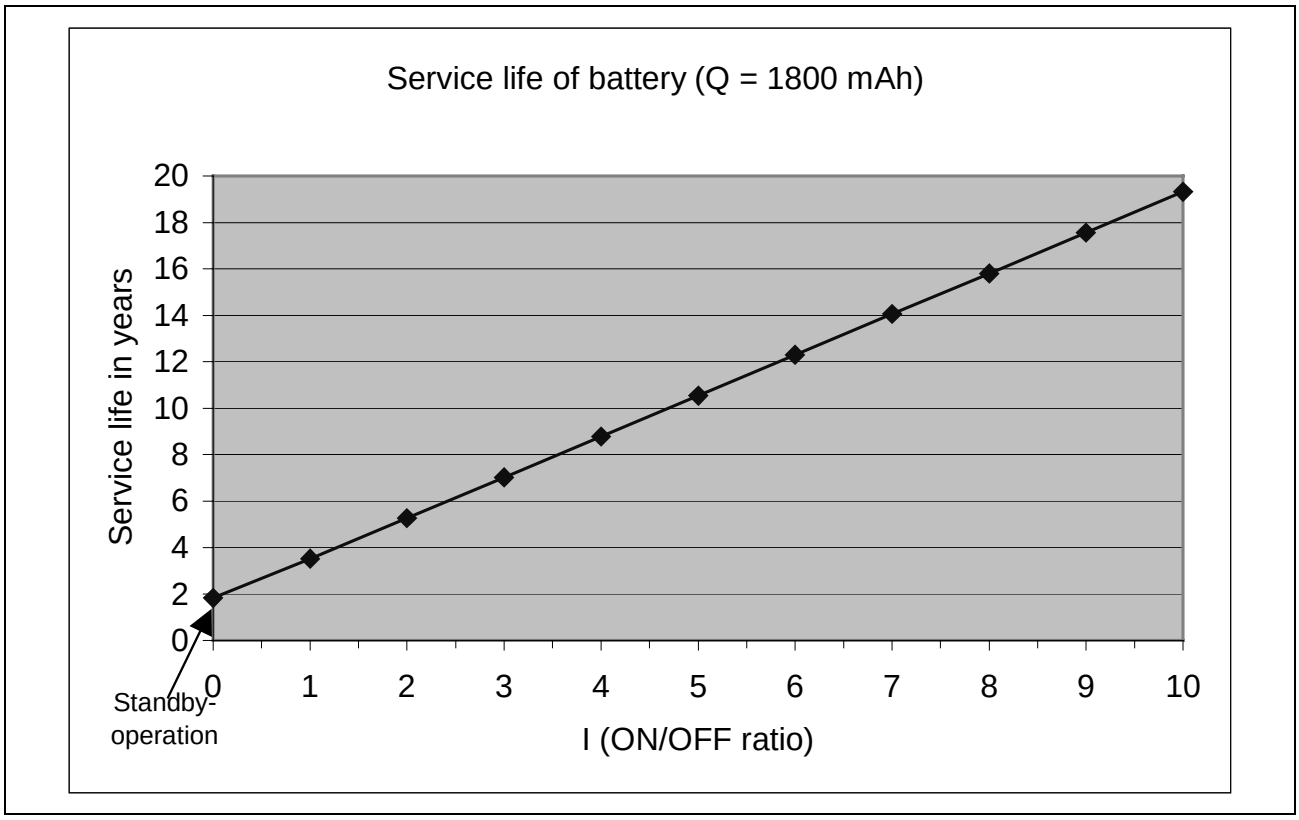

Fig. 8-54: Service life of battery

Thus, the longer the drive controller is switched on, the longer is the service life of the battery.

Courtesy of CMA/Flodyne/Hydradyne ▪ Motion Control ▪ Hydraulic ▪ Pneumatic ▪ Electrical ▪ Mechanical ▪ (800) 426-5480 ▪ www.cmafh.com

Refresh

Prior to using the battery you always have to refresh the battery:

1. Connect connector of battery to mating connector of resistor (see figure below)
   (Battery and resistor are parts of SUP-E03-DKC*CS-BATTRY; see chapter "Additional Components" → "Accessories")

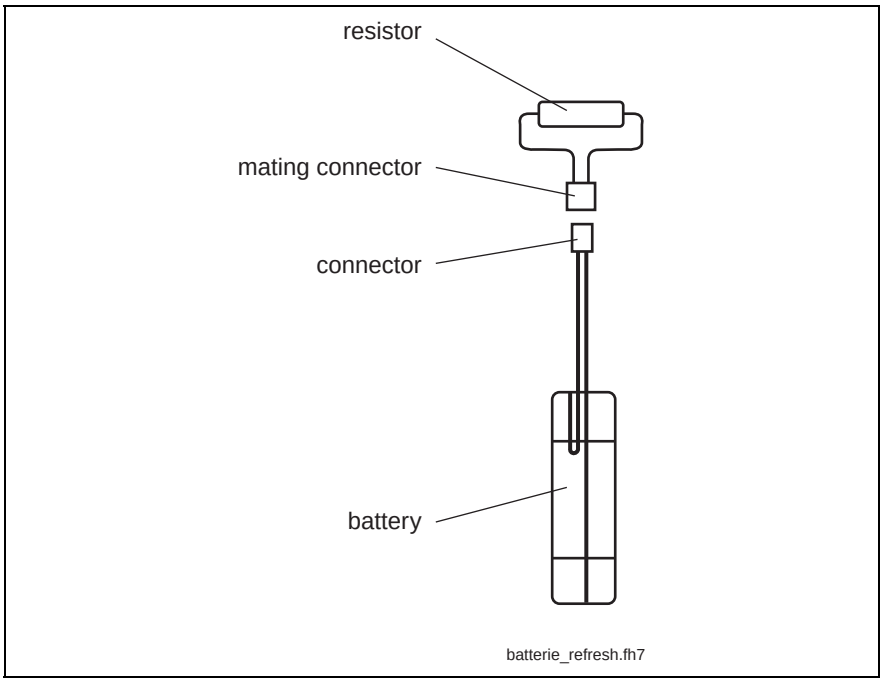

Fig. 8-55: Battery refreshing

2. Wait **2 minutes**
3. Disconnect battery

Changing the battery

Depending on the operating hours of the motor, the time available for changing the battery is limited:

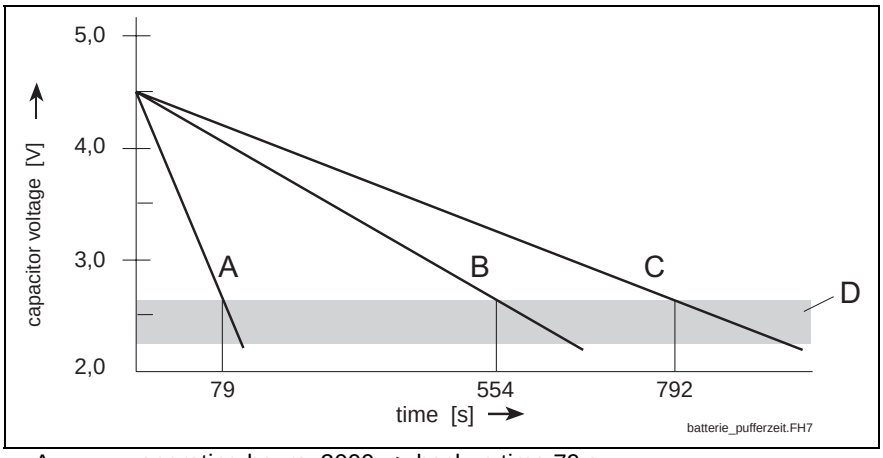

A: operating hours: 3000 => backup time 79 s
B: operating hours: 1000 => backup time 554 s
C: operating hours: 0 (condition as supplied) => backup time 792 s
D: range of battery undervoltage (2.3 to 2.7 V)

Fig. 8-56: Backup time of supply voltage

During this time the supply voltage of the absolute value encoder is backed up so that the information regarding the absolute value encoder position is maintained.

Courtesy of CMA/Flodyne/Hydradyne ▪ Motion Control ▪ Hydraulic ▪ Pneumatic ▪ Electrical ▪ Mechanical ▪ (800) 426-5480 ▪ www.cmafh.com

Note: If you exceed the backup time when changing the battery the absolute value encoder position gets lost.

Note: If you use the drive controllers together with Rexroth Cartesian Motion Systems (CMS), regard the instructions of the CMS manual (RE 82 674) now.

1. Push battery cover downwards and remove cover:

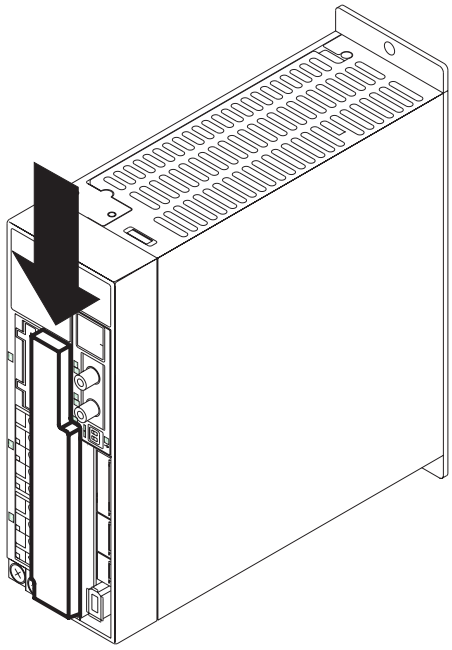

batteriefach.fh7

2. Remove old battery
3. If not already done so, refresh new battery now (see instructions above)
4. Insert new battery

Courtesy of CMA/Flodyne/Hydradyne ▪ Motion Control ▪ Hydraulic ▪ Pneumatic ▪ Electrical ▪ Mechanical ▪ (800) 426-5480 ▪ www.cmafh.com

5. Connect connector attached to the battery to one of the two mating connectors on the drive controller

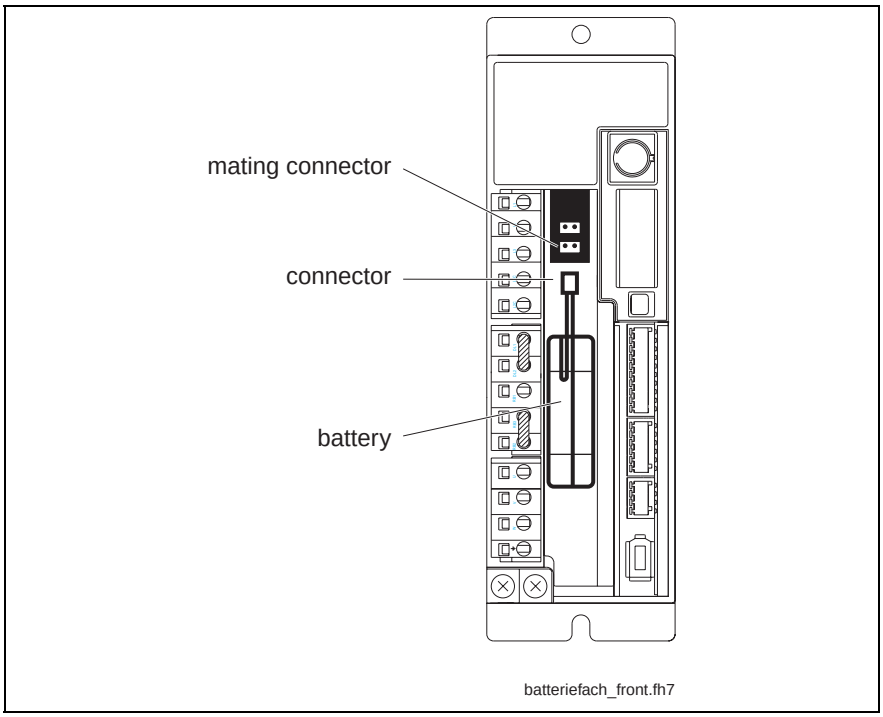

6. Attach battery cover. Push cover upwards until it snaps in
7. Dispose old battery according to the valid directions of your country

Courtesy of CMA/Flodyne/Hydradyne ▪ Motion Control ▪ Hydraulic ▪ Pneumatic ▪ Electrical ▪ Mechanical ▪ (800) 426-5480 ▪ www.cmafh.com

Notes

Courtesy of CMA/Flodyne/Hydradyne ▪ Motion Control ▪ Hydraulic ▪ Pneumatic ▪ Electrical ▪ Mechanical ▪ (800) 426-5480 ▪ www.cmafh.com

9 Identifying the Components

9.1 Marking the Components

Each drive component is marked by a type designation.

A type plate is attached to all units including the motor.

A label (cable marker) is wrapped round the ready-made cable. The type designation and length are indicated on this label. (The designation for the cable itself - without connector - is printed on the cable sheath.)

The marking of accessories packed in bags is either printed on the bag or indicated on an accompanying note.

9.2 Type Plates

Type Plates at the Drive Controller

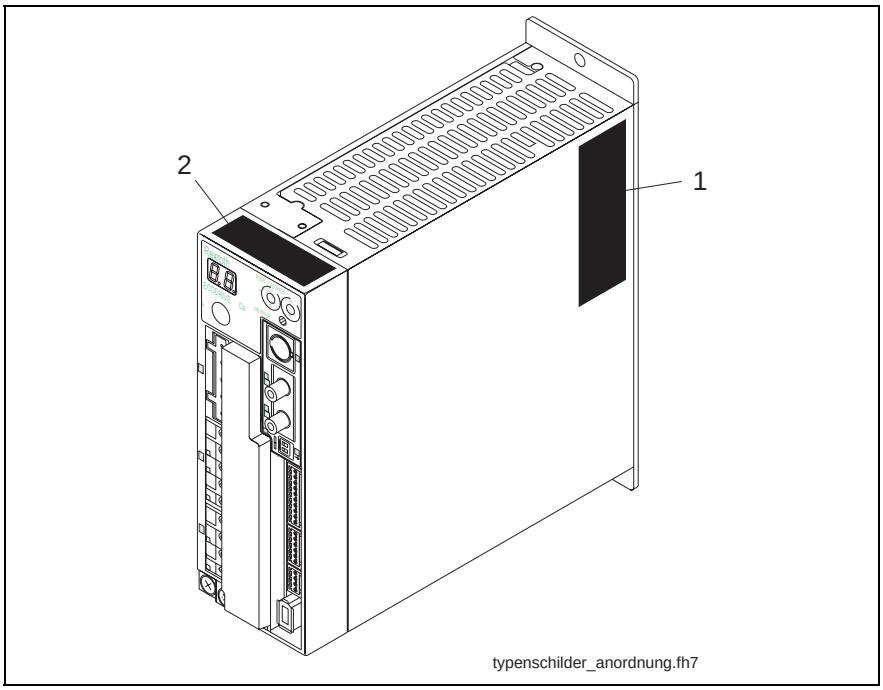

1: type plate 1
2: type plate 2

Fig. 9-1: Type plate arrangement at the drive controller

Courtesy of CMA/Flodyne/Hydradyne ▪ Motion Control ▪ Hydraulic ▪ Pneumatic ▪ Electrical ▪ Mechanical ▪ (800) 426-5480 ▪ www.cmafh.com

Type plate 1

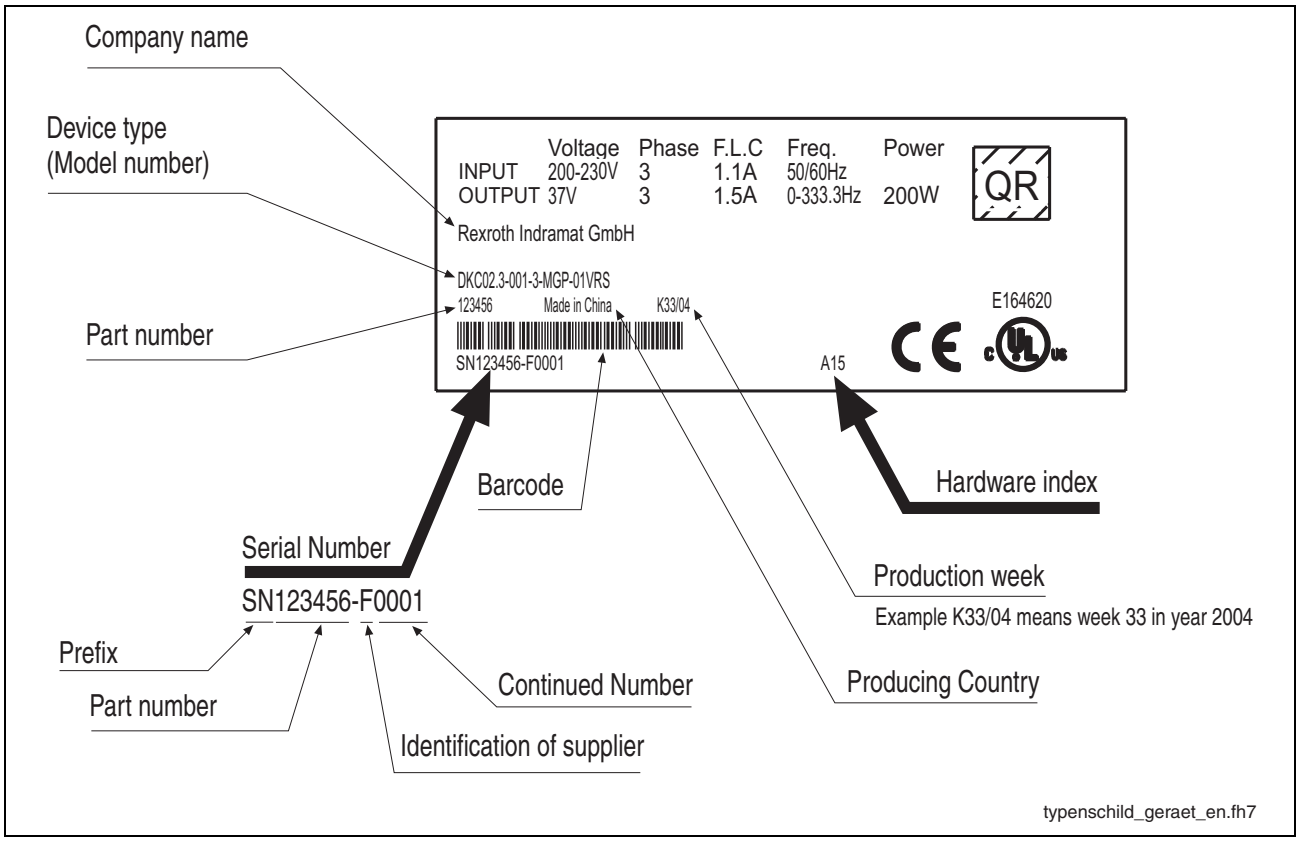

Fig. 9-2: Type plate 1

Type plate 2

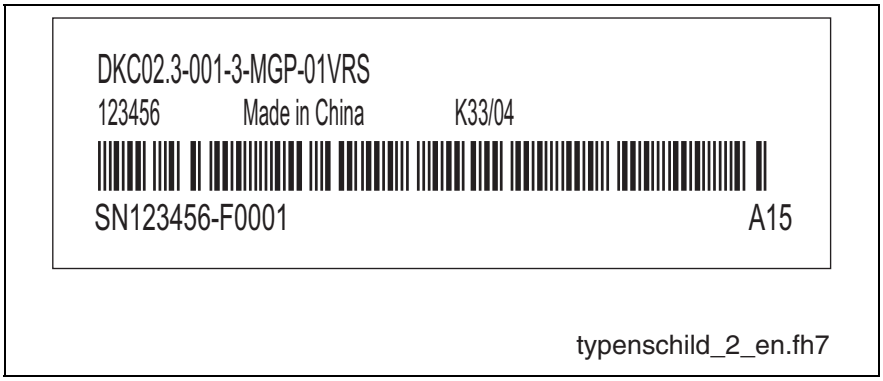

Fig. 9-3: Type plate 2

Type plate 2 is a section of type plate 1.

Courtesy of CMA/Flodyne/Hydradyne ▪ Motion Control ▪ Hydraulic ▪ Pneumatic ▪ Electrical ▪ Mechanical ▪ (800) 426-5480 ▪ www.cmafh.com

Type Plate at the Motor

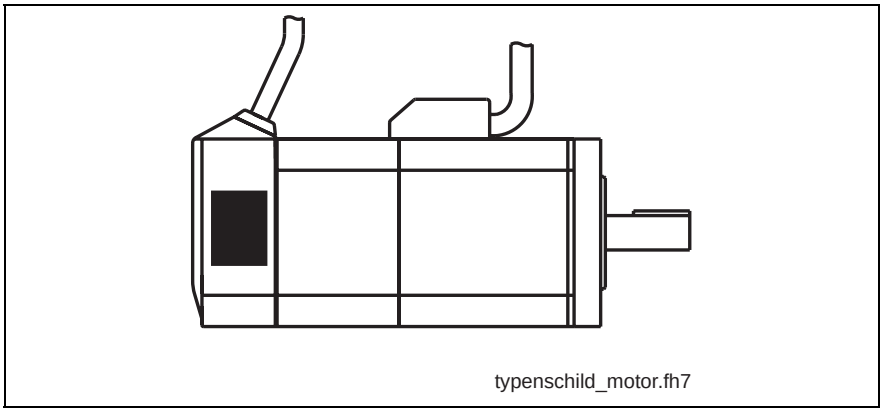

Fig. 9-4: Type plate at the motor

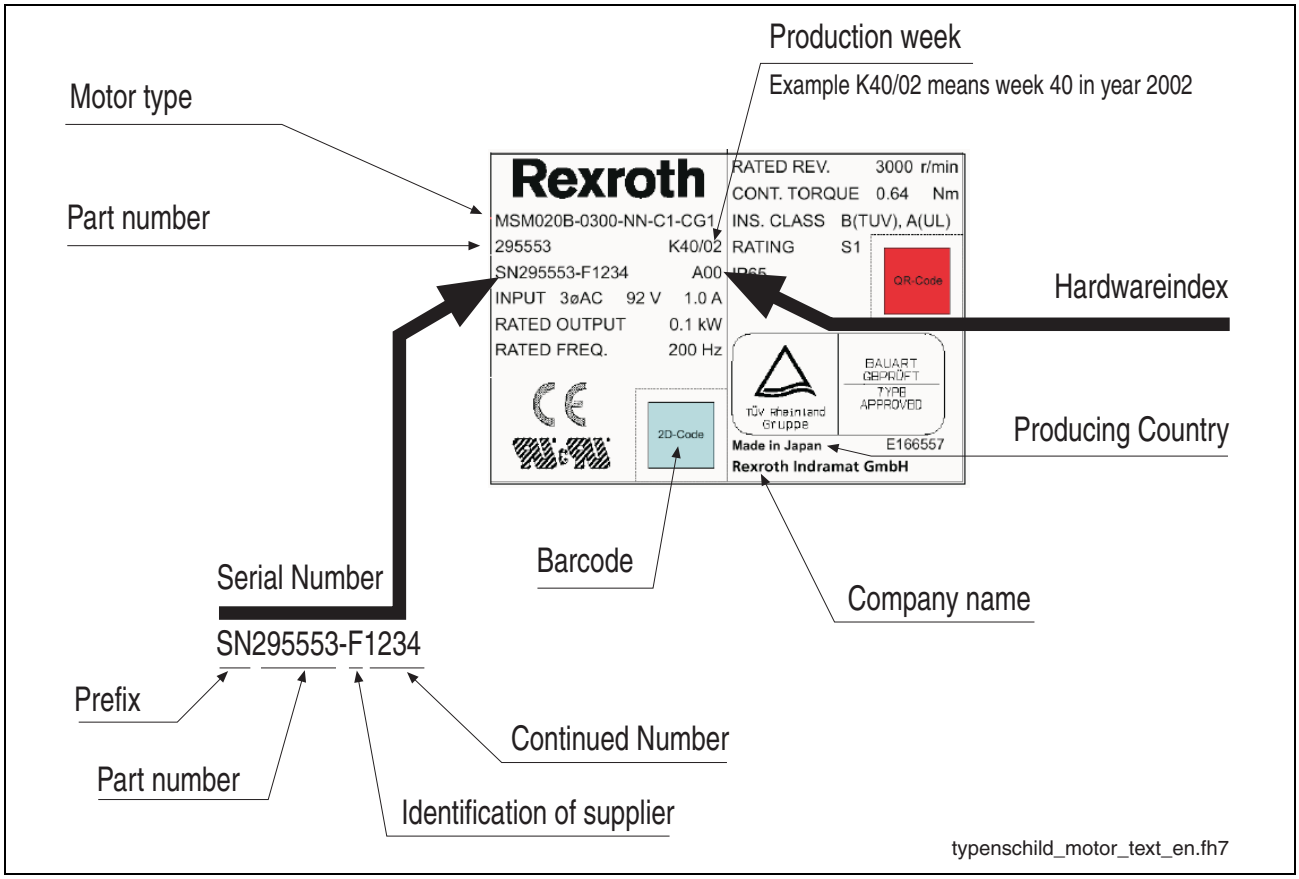

Fig. 9-5: Motor type plate

Courtesy of CMA/Flodyne/Hydradyne ▪ Motion Control ▪ Hydraulic ▪ Pneumatic ▪ Electrical ▪ Mechanical ▪ (800) 426-5480 ▪ www.cmafh.com

Notes

Courtesy of CMA/Flodyne/Hydradyne ▪ Motion Control ▪ Hydraulic ▪ Pneumatic ▪ Electrical ▪ Mechanical ▪ (800) 426-5480 ▪ www.cmafh.com

10 Additional Components

10.1 Cables

Motor Cable IKG0331

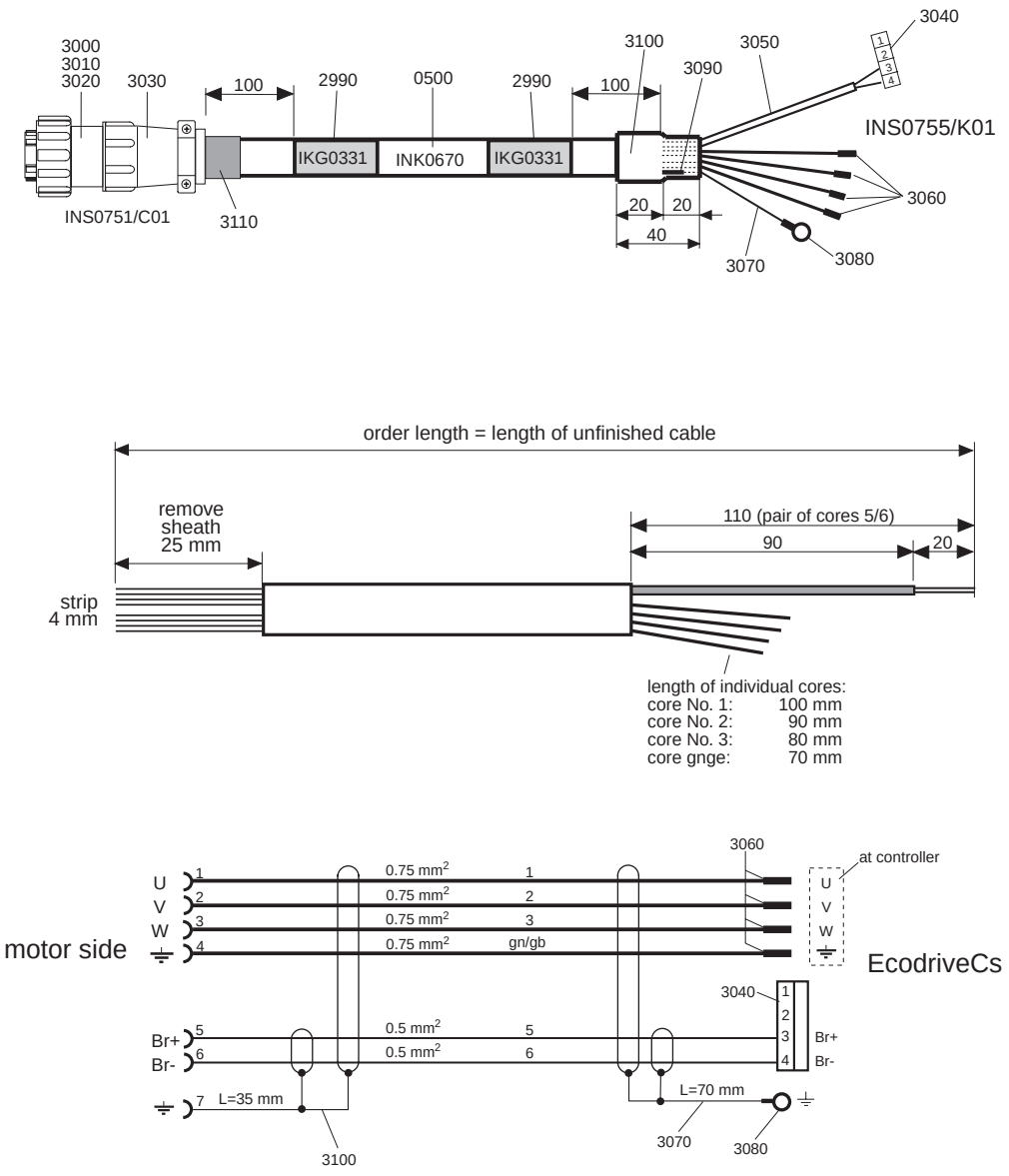

order type	part No.
IKG0331/xxx,x (var.)	298 153
IKG0331/005,0	298 154
IKG0331/010,0	298 155
IKG0331/015,0	298 156
IKG0331/020,0	298 157

Secure solder joint (shield - strand) with shrink hose (item 3090 = 12mm)!

Fig. 10-1: Motor cable IKG331

Motor cable IKG0331 replaces motor cable IKG0330 formerly used.

Courtesy of CMA/Flodyne/Hydradyne ▪ Motion Control ▪ Hydraulic ▪ Pneumatic ▪ Electrical ▪ Mechanical ▪ (800) 426-5480 ▪ www.cmafh.com

Motor Extension Cable IKG0332

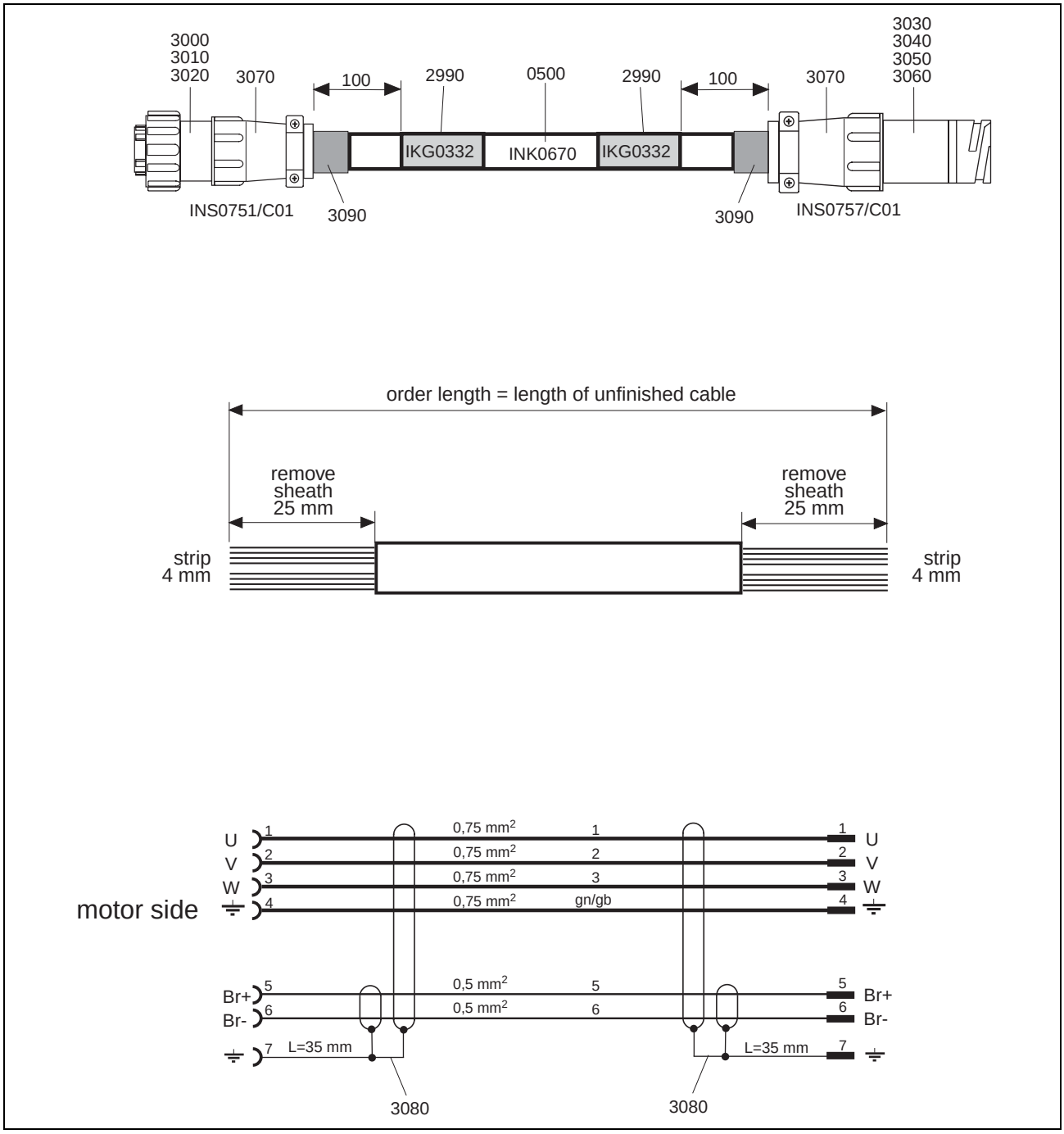

Fig. 10-2: Motor extension cable IKG0332

Courtesy of CMA/Flodyne/Hydradyne ▪ Motion Control ▪ Hydraulic ▪ Pneumatic ▪ Electrical ▪ Mechanical ▪ (800) 426-5480 ▪ www.cmafh.com

Encoder Cable IKS0230

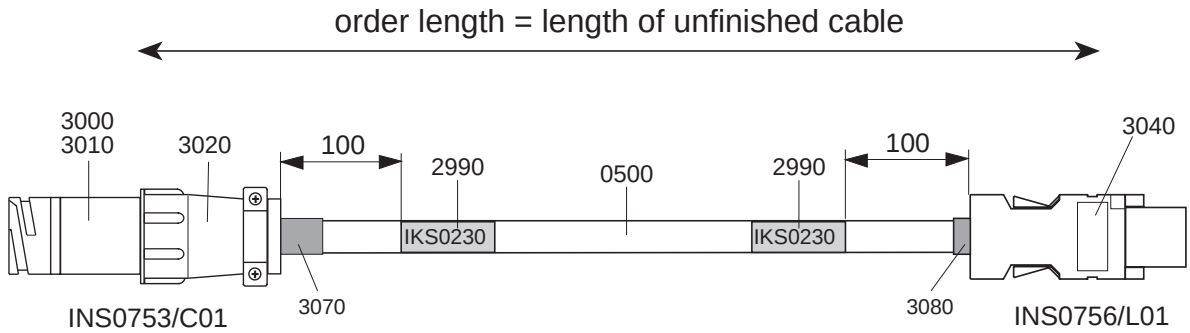

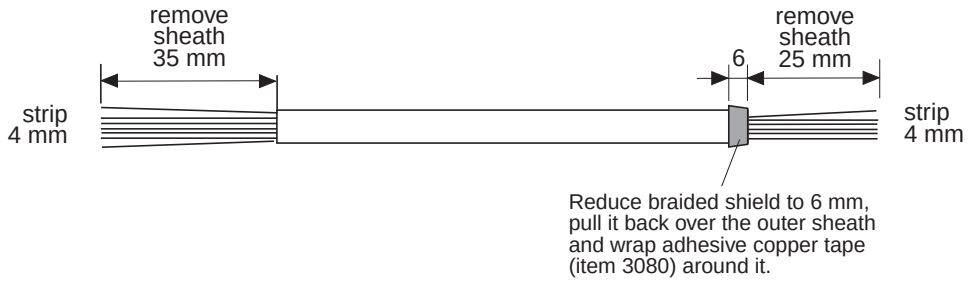

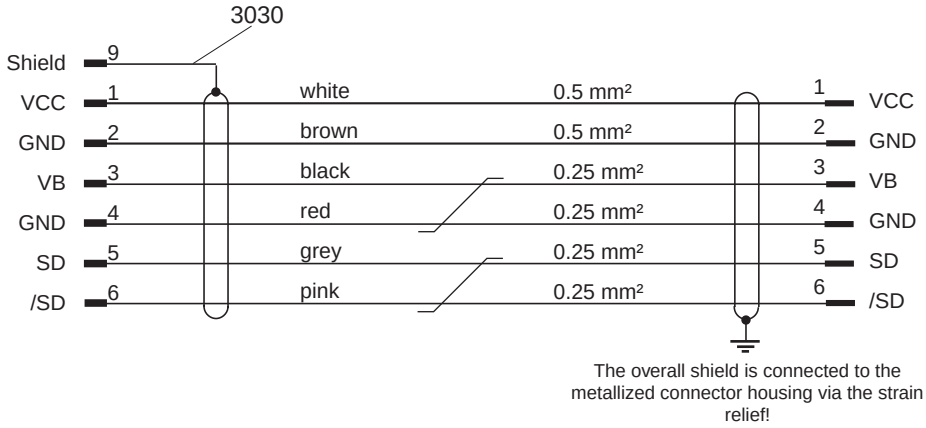

order type	part no.
IKS0230/xxx,x (var.)	295 922
IKS0230/005,0	296 148
IKS0230/010,0	296 149
IKS0230/015,0	296 140
IKS0230/020,0	296 142

Secure solder joint (strand - shield) with shrink hose (3060 = 12 mm)!

Fig. 10-3: Encoder cable IKS0230

Courtesy of CMA/Flodyne/Hydradyne ▪ Motion Control ▪ Hydraulic ▪ Pneumatic ▪ Electrical ▪ Mechanical ▪ (800) 426-5480 ▪ www.cmafh.com

Encoder Extension Cable IKS0232

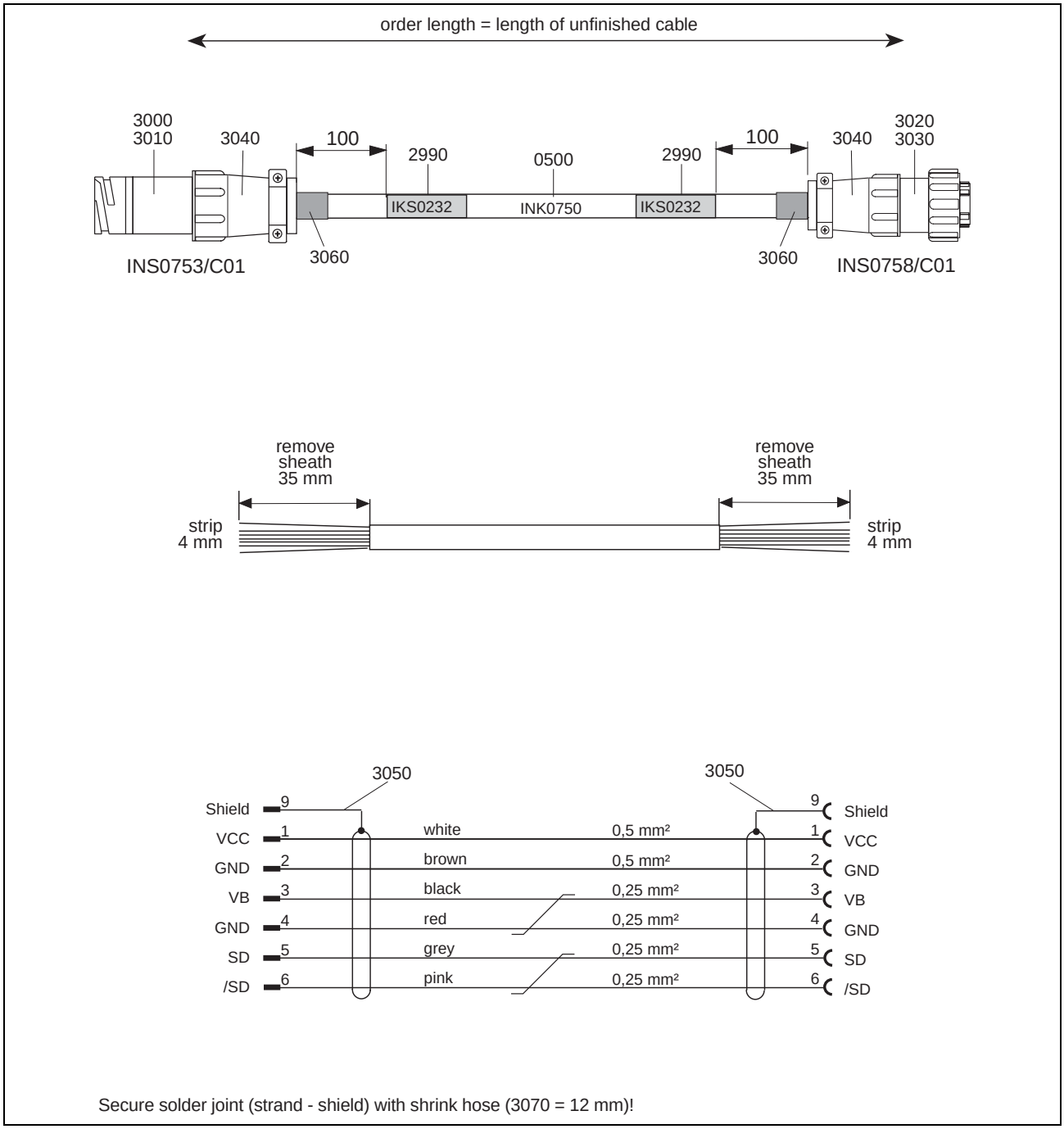

Fig. 10-4: Encoder extension cable IKS0232

Courtesy of CMA/Flodyne/Hydradyne ▪ Motion Control ▪ Hydraulic ▪ Pneumatic ▪ Electrical ▪ Mechanical ▪ (800) 426-5480 ▪ www.cmafh.com

Encoder Emulation Cable RKG0008

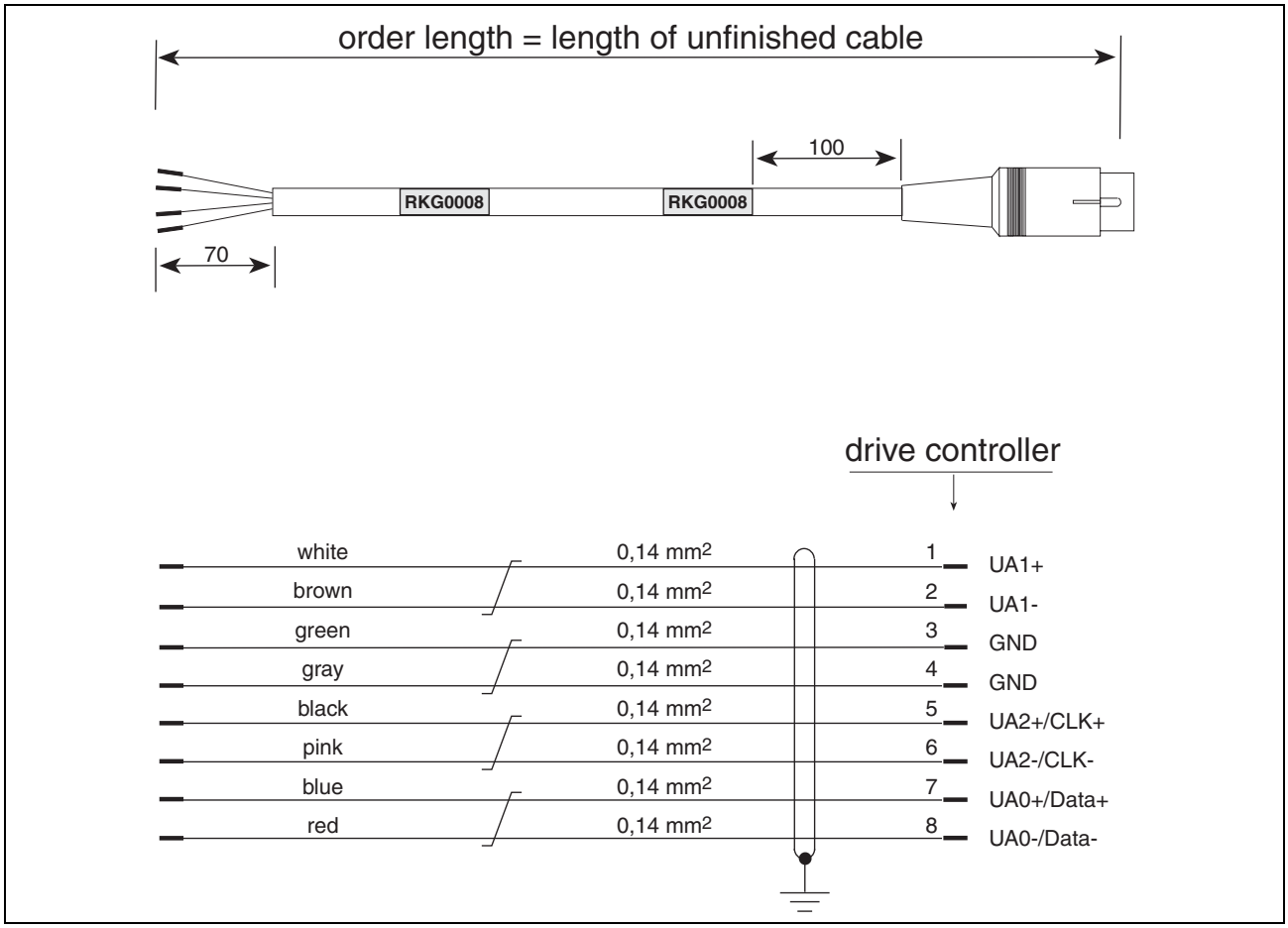

Fig. 10-5: Encoder emulation cable

Courtesy of CMA/Flodyne/Hydradyne ▪ Motion Control ▪ Hydraulic ▪ Pneumatic ▪ Electrical ▪ Mechanical ▪ (800) 426-5480 ▪ www.cmafh.com

RS232 Cable IKB0041

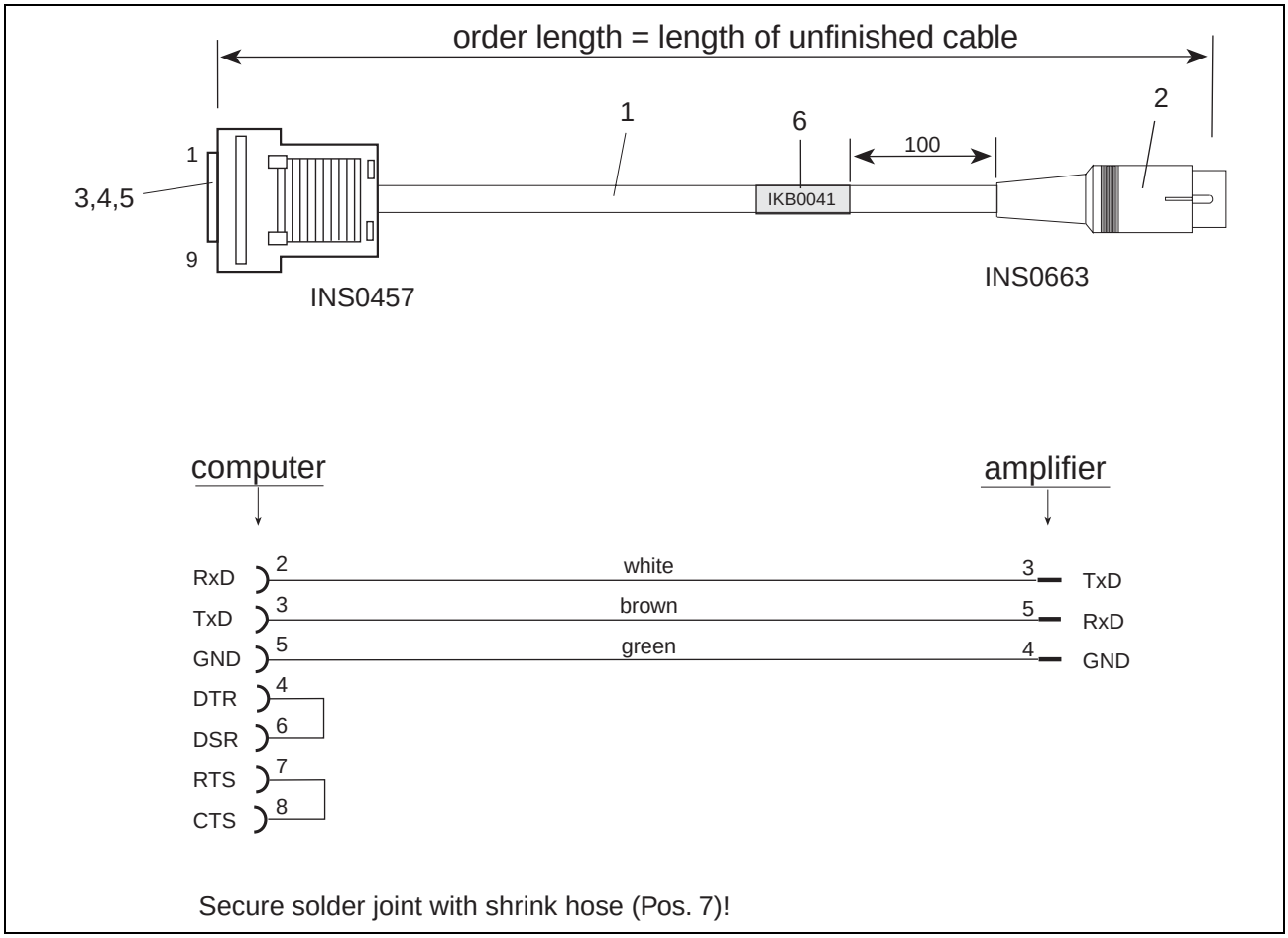

Fig. 10-6: RS232 cable

Cable IKB0041 replaces cable IKS0199 formerly used.

Courtesy of CMA/Flodyne/Hydradyne ▪ Motion Control ▪ Hydraulic ▪ Pneumatic ▪ Electrical ▪ Mechanical ▪ (800) 426-5480 ▪ www.cmafh.com

10.2 Accessories

SUP-E01-DKC*CS-CONSIG

The "SUP-E01-DKC*CS-CONSIG" contains connection and mounting accessories according to the enclosed packaging slip.

Note: The "SUP-E01-DKC*CS-CONSIG" is not contained in scope of supply.

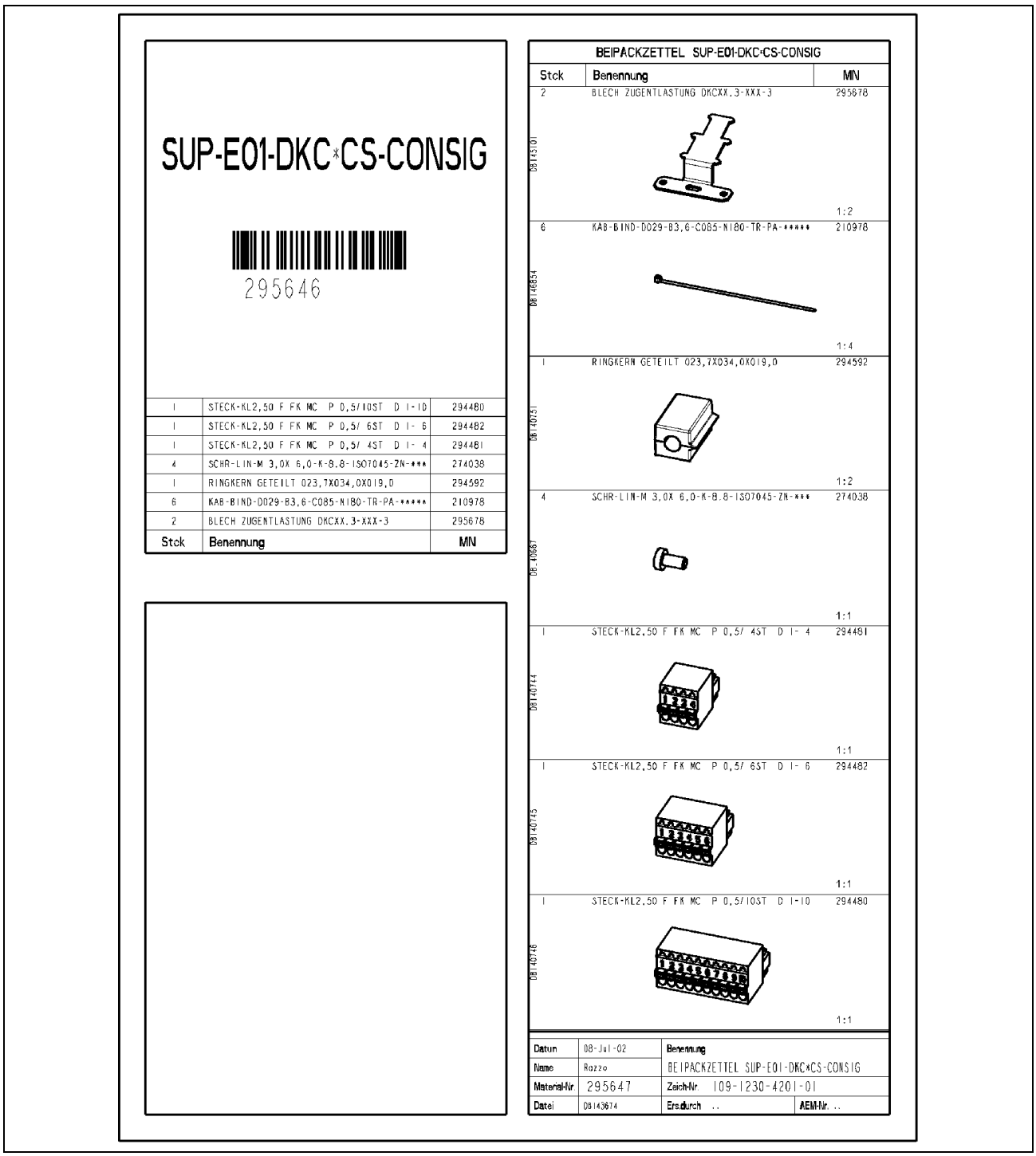

Fig. 10-7: SUP-E01-DKC*CS-CONSIG (packaging slip)

Rexroth Bosch Group

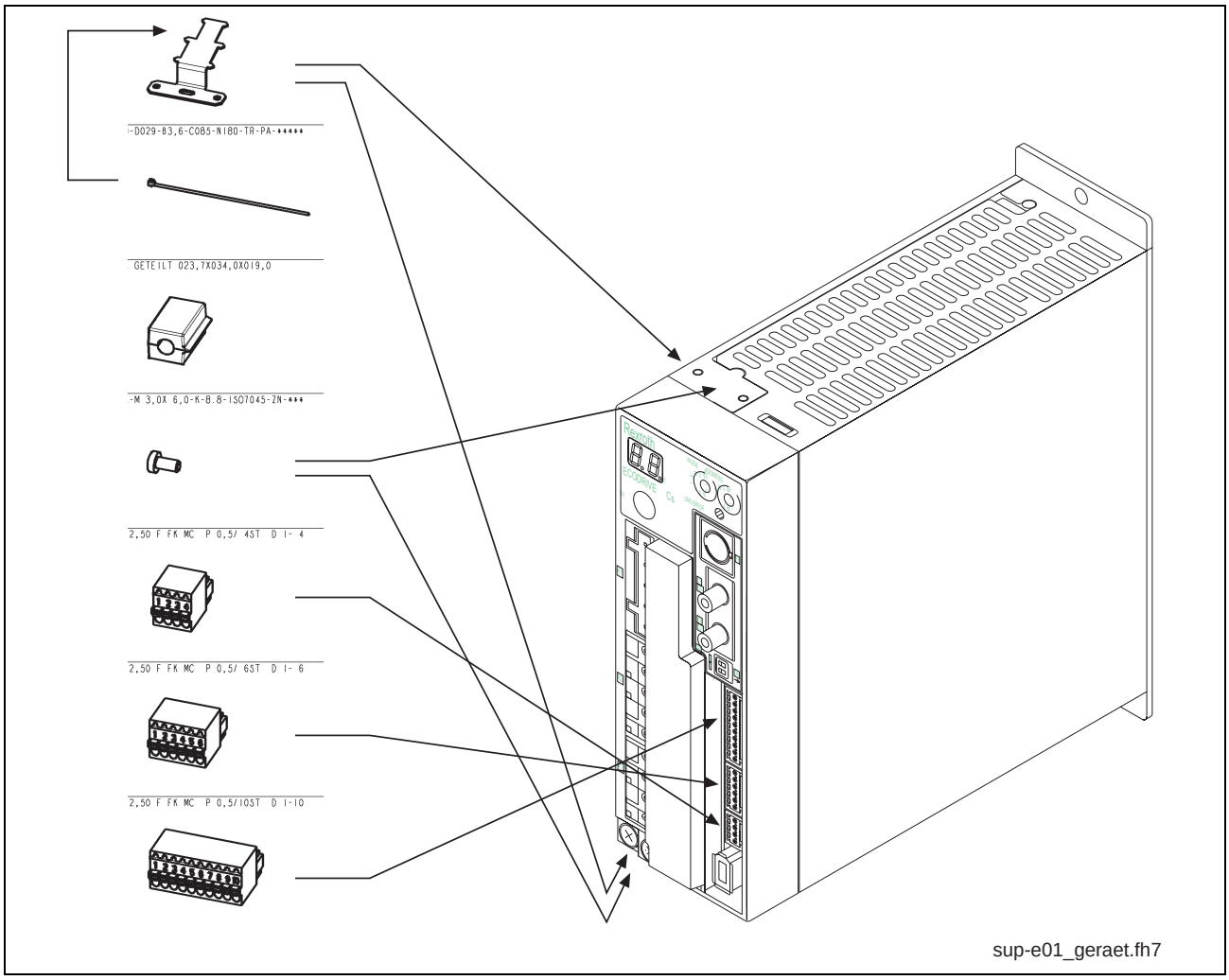

Fig. 10-8: SUP-E01-DKC*CS-CONSIG connection and mounting accessories

Courtesy of CMA/Flodyne/Hydradyne ▪ Motion Control ▪ Hydraulic ▪ Pneumatic ▪ Electrical ▪ Mechanical ▪ (800) 426-5480 ▪ www.cmafh.com

Courtesy of CMA/Flodyne/Hydradyne ▪ Motion Control ▪ Hydraulic ▪ Pneumatic ▪ Electrical ▪ Mechanical ▪ (800) 426-5480 ▪ www.cmafh.com

Folding Ferrite

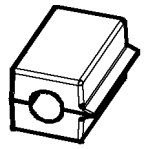

Fig. 10-9: Folding ferrite

The folding ferrite reduces external electromagnetic interferences on the inputs X5_1, X5_2 and X5_3.

How to Use the Folding Ferrite (see figure below):

- Open the folding ferrite
- Wrap control lines once around one half of the folding ferrite. Pay attention to place the folding ferrite as near to the inputs X5_1, X5_2 and X5_3 as possible
- Close the folding ferrite

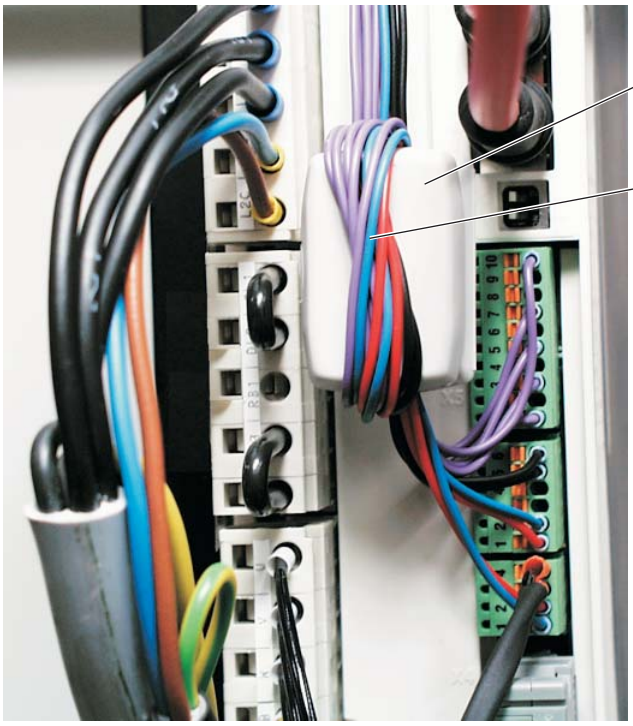

A: folding ferrite
B: control lines

Fig. 10-10: How to use the folding ferrite

Courtesy of CMA/Flodyne/Hydradyne ▪ Motion Control ▪ Hydraulic ▪ Pneumatic ▪ Electrical ▪ Mechanical ▪ (800) 426-5480 ▪ www.cmafh.com

SUP-E02-DKC*CS-CONPWR

The "SUP-E02-DKC*CS-CONPWR" contains connection accessories according to the enclosed packaging slip.

Note: The "SUP-E02-DKC*CS-CONPWR" is contained in scope of supply.

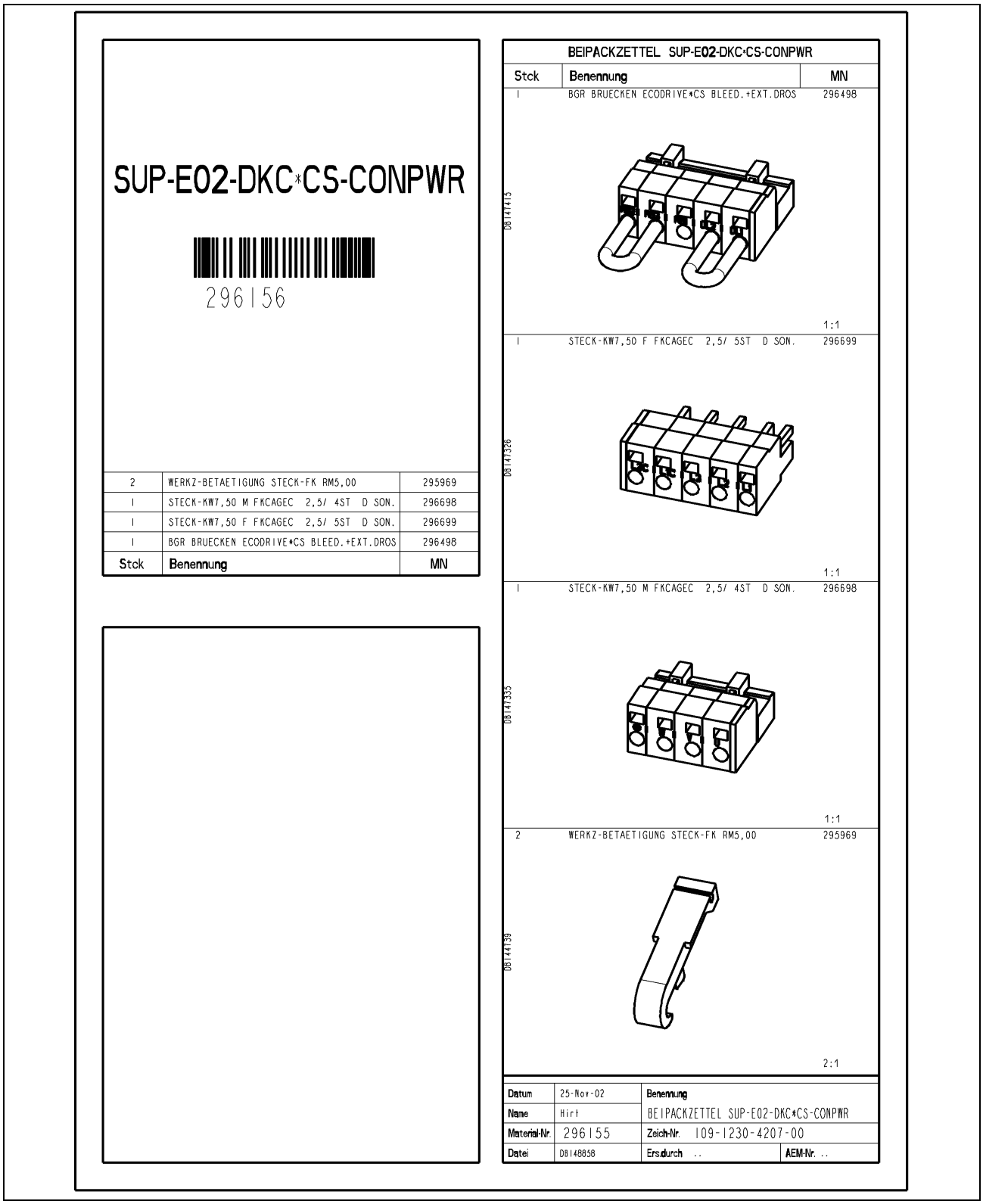

Fig. 10-11: SUP-E02-DKC*CS-CONPWR (packaging slip)

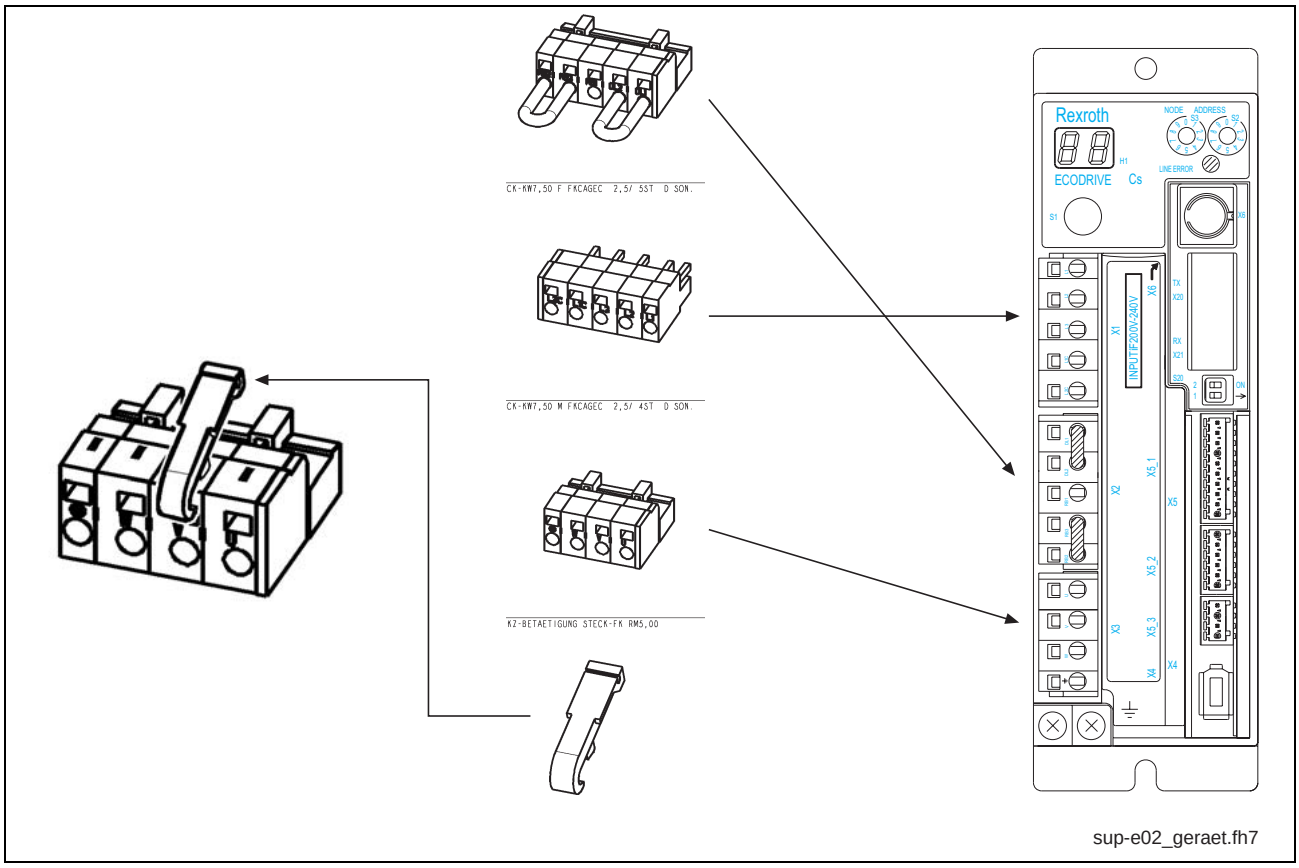

Fig. 10-12: SUP-E02-DKC*CS-CONPWR connection accessories

Courtesy of CMA/Flodyne/Hydradyne ▪ Motion Control ▪ Hydraulic ▪ Pneumatic ▪ Electrical ▪ Mechanical ▪ (800) 426-5480 ▪ www.cmafh.com

Courtesy of CMA/Flodyne/Hydradyne ▪ Motion Control ▪ Hydraulic ▪ Pneumatic ▪ Electrical ▪ Mechanical ▪ (800) 426-5480 ▪ www.cmafh.com

SUP-E03-DKC*CS-BATTRY

The "SUP-E03-DKC*CS-BATTRY" contains accessories for operating motors with absolute encoder according to the enclosed packaging slip.

Note: The "SUP-E03-DKC*CS-BATTRY" is **not** contained in scope of supply.

Battery Type: ER6C; 3,6 V; 1800 mA; lithium

Resistor 10 Ohm

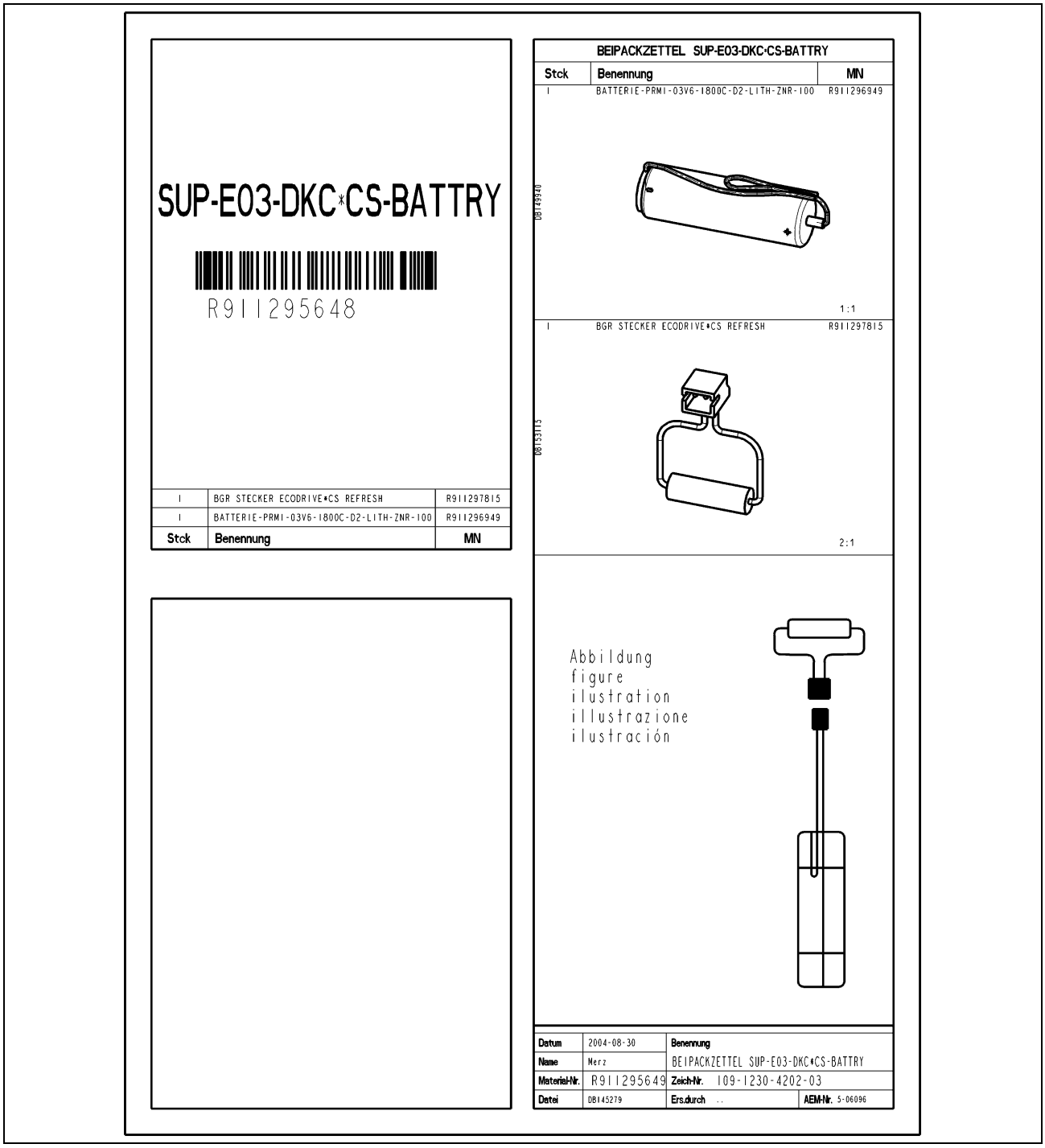

Fig. 10-13: SUP-E03-DKC*CS-BATTRY

Courtesy of CMA/Flodyne/Hydradyne ▪ Motion Control ▪ Hydraulic ▪ Pneumatic ▪ Electrical ▪ Mechanical ▪ (800) 426-5480 ▪ www.cmafh.com

SUP-E04-DKC*CS-ENCODR (Encoder Adapter)

"SUP-E04-DKC*CS-ENCODR" is a module for adapting 1Vss encoders to the drive controller. The module must be plugged on interface X4 on the drive controller.

Note: The "SUP-E04-DKC*CS-ENCODR" is **not** contained in scope of supply.

Dimensions

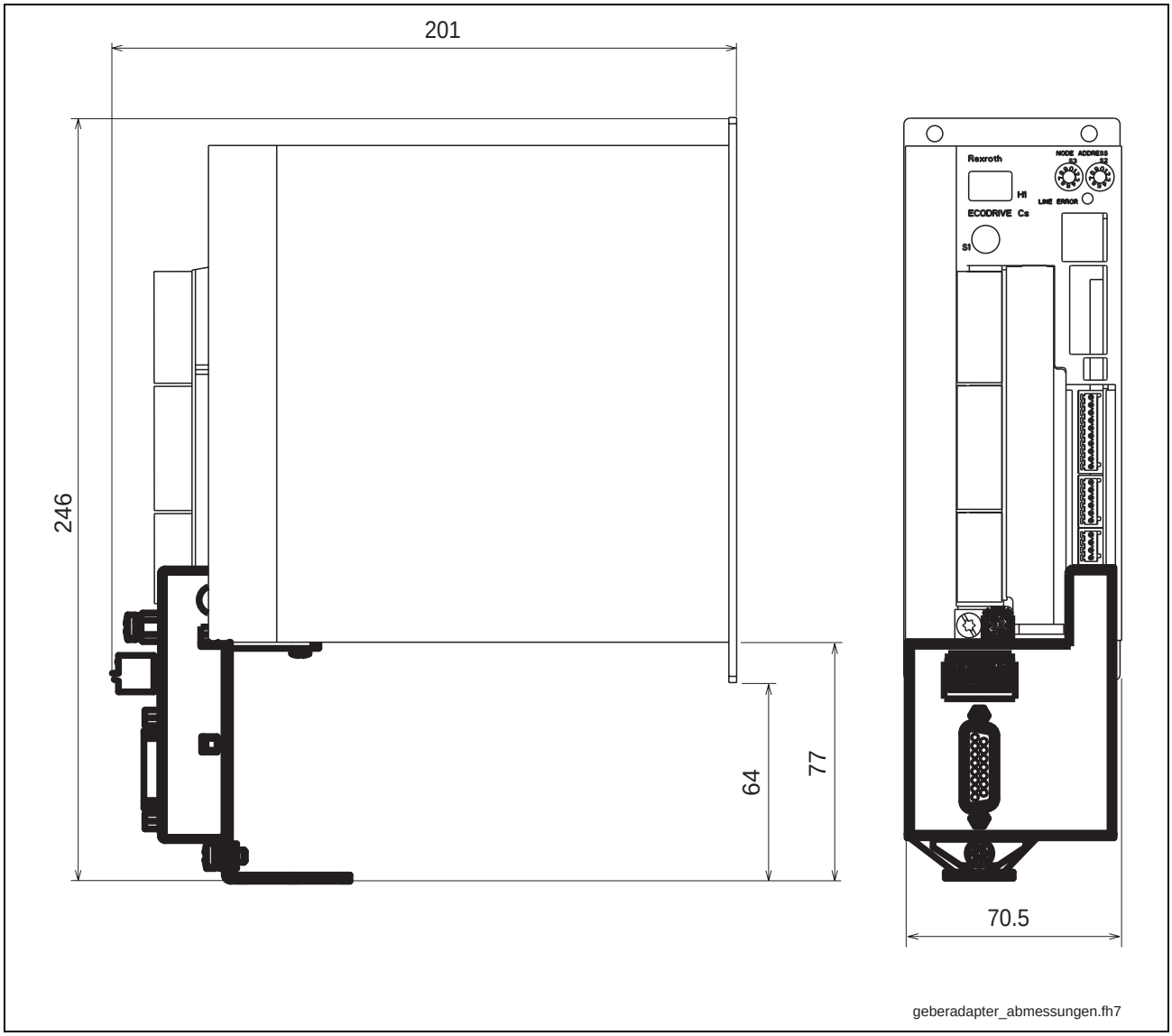

Fig. 10-14: Drive controller with encoder adapter

Courtesy of CMA/Flodyne/Hydradyne ▪ Motion Control ▪ Hydraulic ▪ Pneumatic ▪ Electrical ▪ Mechanical ▪ (800) 426-5480 ▪ www.cmafh.com

Mounting

- If present, unscrew screw of ground connection:

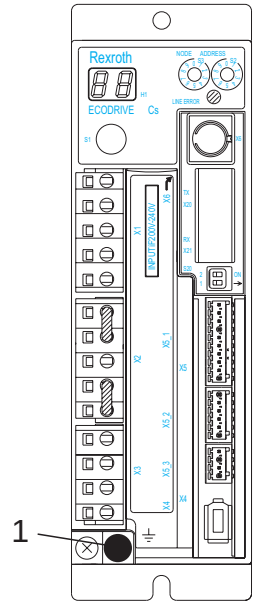

1: Screw of ground connection

Fig. 10-15: Screw of ground connection

- Screw angle plate to the bottom of drive controller:

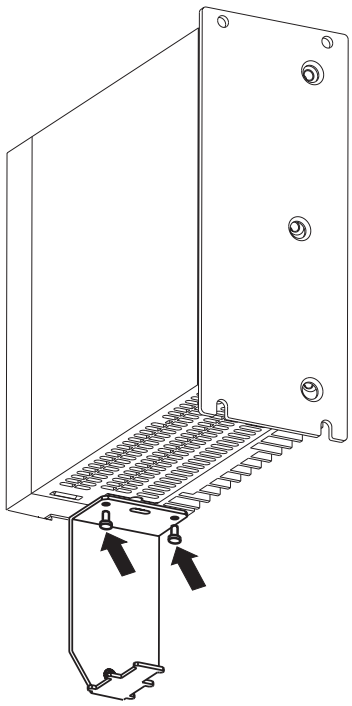

Fig. 10-16: Angle plate

Courtesy of CMA/Flodyne/Hydradyne ▪ Motion Control ▪ Hydraulic ▪ Pneumatic ▪ Electrical ▪ Mechanical ▪ (800) 426-5480 ▪ www.cmafh.com

- Plug encoder adapter on interface X4 of drive controller:

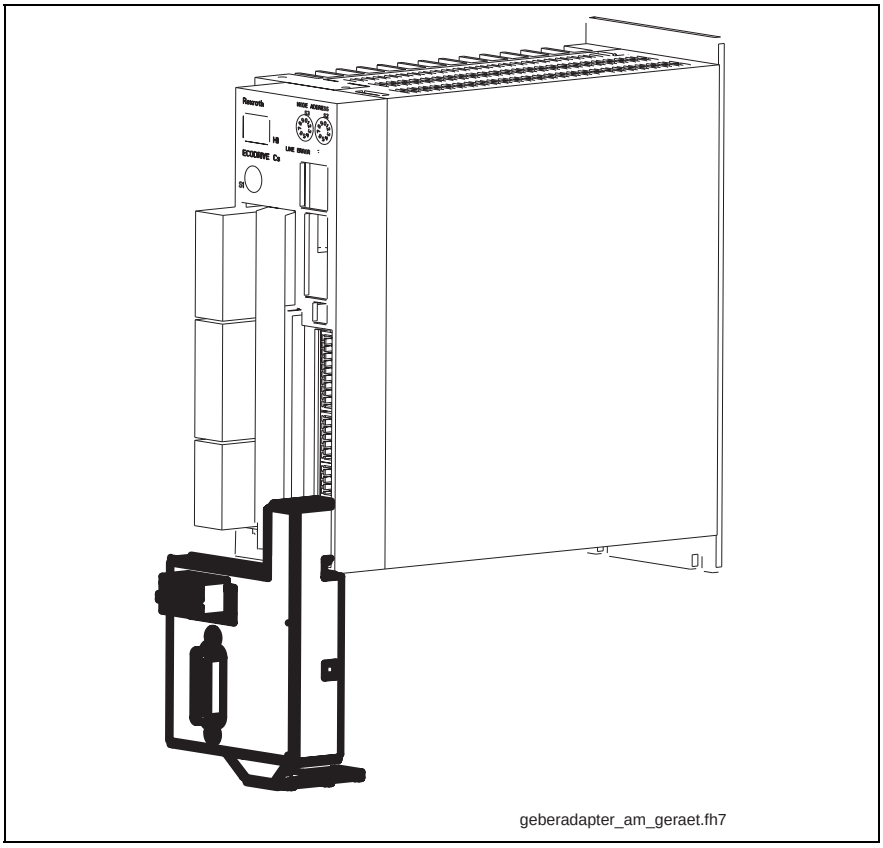

Fig. 10-17: Encoder adapter on interface X4

Courtesy of CMA/Flodyne/Hydradyne ▪ Motion Control ▪ Hydraulic ▪ Pneumatic ▪ Electrical ▪ Mechanical ▪ (800) 426-5480 ▪ www.cmafh.com

- Screw on the encoder adapter (see figure below):
  - Screw in the bolt (1)
  - If present, screw in screw (2) of ground connection into the bolt
  - Screw in second screw (3)

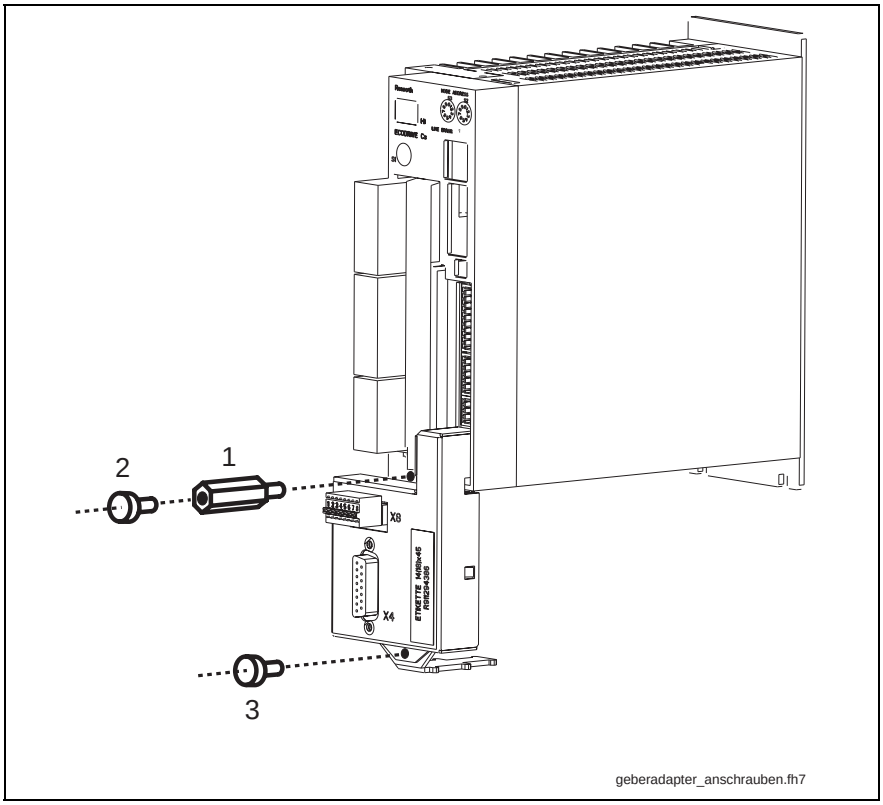

1: Bolt
2: Screw of ground connection
3: Screw

Fig. 10-18: Screw on the encoder adapter

Courtesy of CMA/Flodyne/Hydradyne ▪ Motion Control ▪ Hydraulic ▪ Pneumatic ▪ Electrical ▪ Mechanical ▪ (800) 426-5480 ▪ www.cmafh.com

Interfaces - Overview

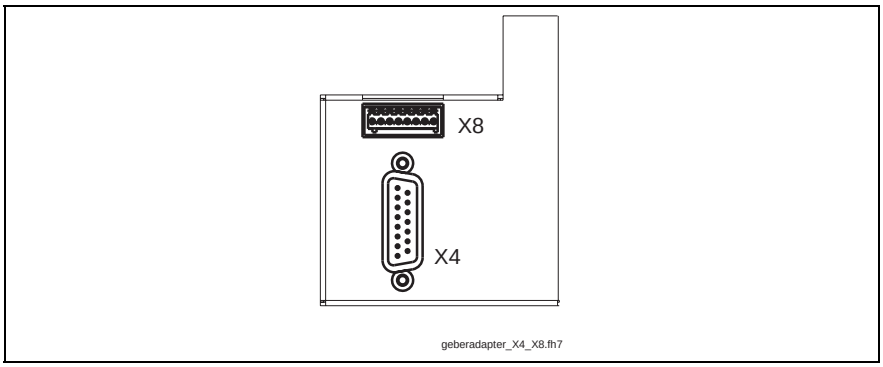

Fig. 10-19: Interfaces

Interface X4

Illustration

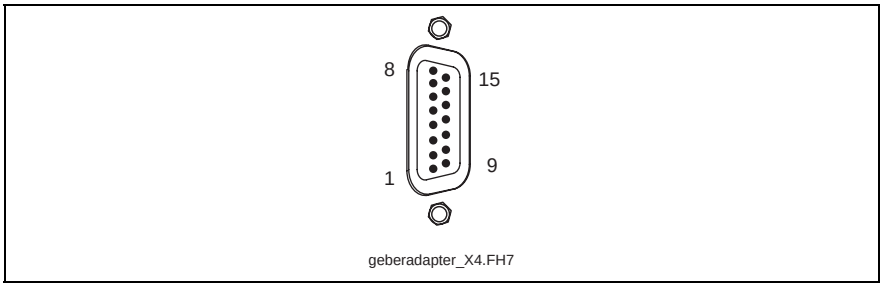

Fig. 10-20: Connector X4

Design

Type	No. of pins	Design
D-SUB	15	pins on unit

Fig. 10-21: Design

Connection cross section

Cross section single wire [mm²]	Cross section multi core wire [mm²]	Cross section in AWG gauge no.:
--	0.25-0.5	--

Fig. 10-22: Connection cross section

Connection

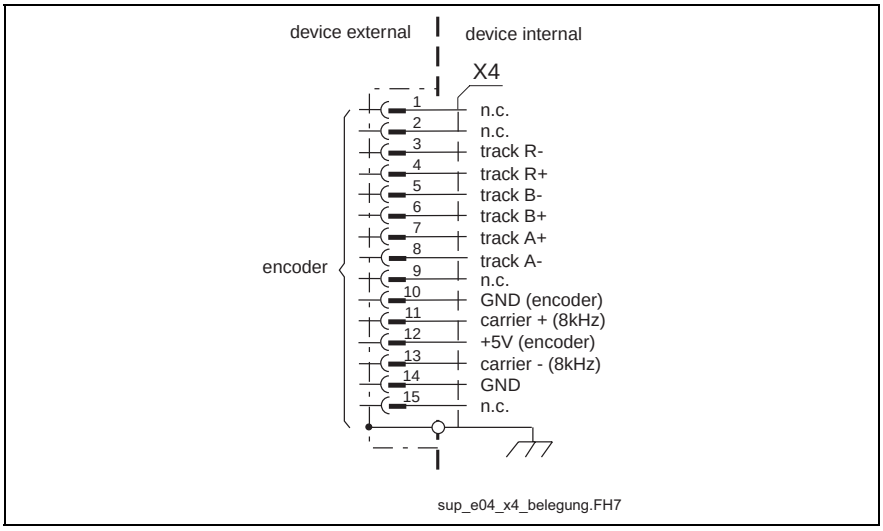

Fig. 10-23: Connection

Shield connection Via D-subminiature mounting screws and metal connector housing.

Courtesy of CMA/Flodyne/Hydradyne ▪ Motion Control ▪ Hydraulic ▪ Pneumatic ▪ Electrical ▪ Mechanical ▪ (800) 426-5480 ▪ www.cmafh.com

Interface X8

Illustration

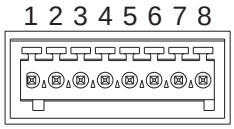

Fig. 10-24: Connector X8

Design

Type	No. of pins	Design
spring tension	8	bushings

Fig. 10-25: Design

Connection cross section

Cross section single wire [mm²]	Cross section in AWG gauge no.
0,25 - 0,5	23 - 20

Fig. 10-26: Connection cross section

Connection

1	Hall sensor A
2	Hall sensor B
3	Hall sensor C
4	Motor temperature (IN)
5	Motor temperature (GND)
6	+5V (Power supply Hall sensor)
7	GND (Hall sensor)
8	GND

Fig. 10-27: Connection

Courtesy of CMA/Flodyne/Hydradyne ▪ Motion Control ▪ Hydraulic ▪ Pneumatic ▪ Electrical ▪ Mechanical ▪ (800) 426-5480 ▪ www.cmafh.com

SUP-E05-DKC*CS-SURGEP

The "SUP-E05-DKC*CS-SURGEP" contains accessories (NTC thermistor; 33 Ohm at 25 °C and 19.6 Ohm at 40 °C) for reducing the inrush current of the drive controller. The "SUP-E05-DKC*CS-SURGEP" is suitable for 100 W, 200 W, and 400 W drive controllers.

CAUTION

Risk of damage by heat!

⇒ **400 W drive controllers** (DKCxx.x-012) that are operated with SUP-E05-DKC*CS-SURGEP may **only** be operated **with a maximum power of 70%**. With higher load the NTC thermistor gets too hot.

Note: For 750 W drive controllers (DKCxx.x-018) the SUP-E05-DKC*CS-SURGEP is not suitable.

Connect "SUP-E05-DKC*CS-SURGEP" to terminal X2 of the drive controller (see mounting instructions in the leaflet enclosed).

Note: The "SUP-E05-DKC*CS-SURGEP" is not contained in scope of supply.

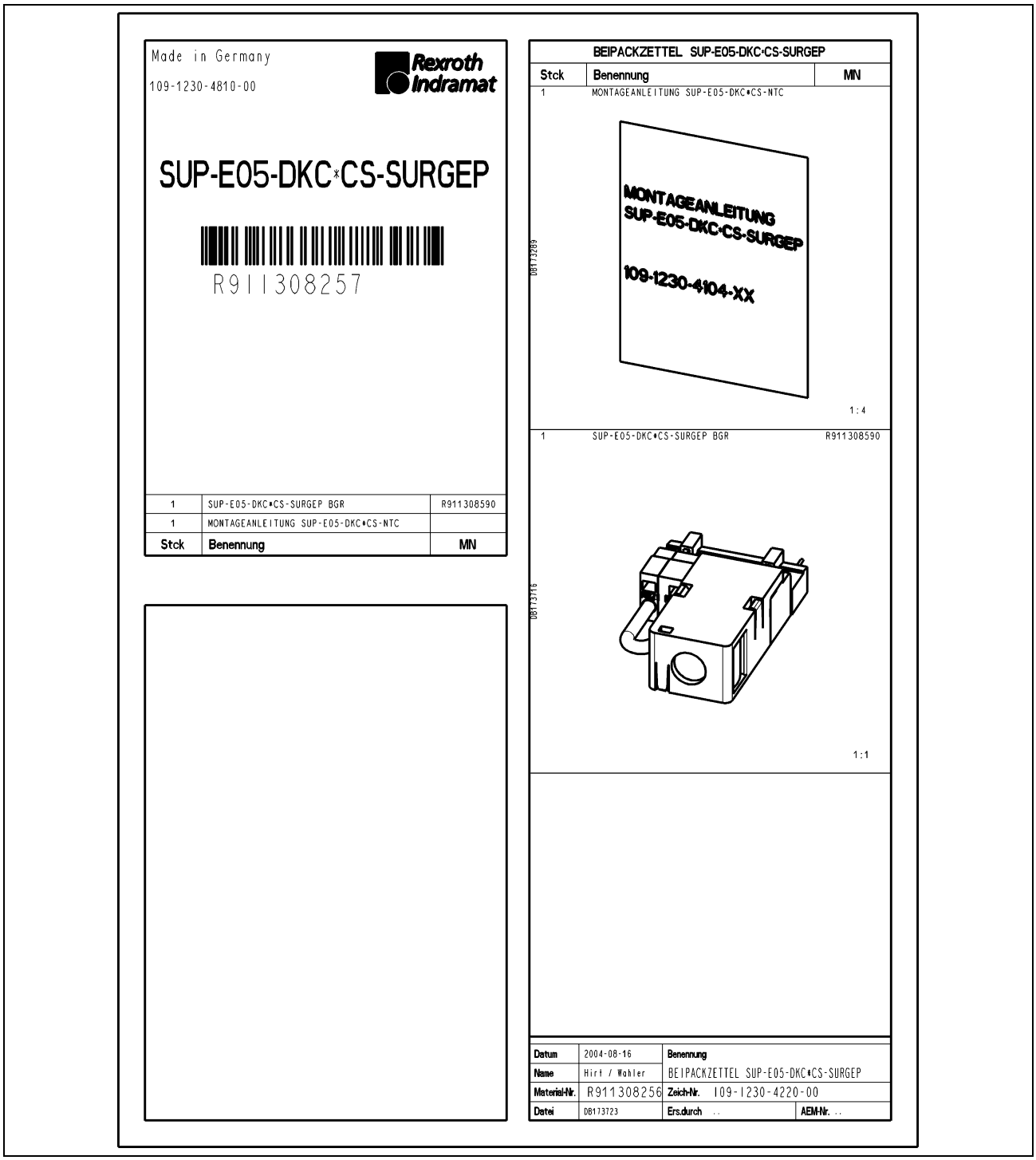

Fig. 10-28: SUP-E05-DKC*CS-SURGEP (packaging slip)

Courtesy of CMA/Flodyne/Hydradyne ▪ Motion Control ▪ Hydraulic ▪ Pneumatic ▪ Electrical ▪ Mechanical ▪ (800) 426-5480 ▪ www.cmafh.com

Courtesy of CMA/Flodyne/Hydradyne ▪ Motion Control ▪ Hydraulic ▪ Pneumatic ▪ Electrical ▪ Mechanical ▪ (800) 426-5480 ▪ www.cmafh.com

SUP-E06-DKC*CS-CONSIG

The "SUP-E06-DKC*CS-CONSIG" contains connection and mounting accessories for drive controllers DKC01.3-xxx according to the enclosed packaging slip.

Note: The "SUP-E06-DKC*CS-CONSIG" is not contained in scope of supply.

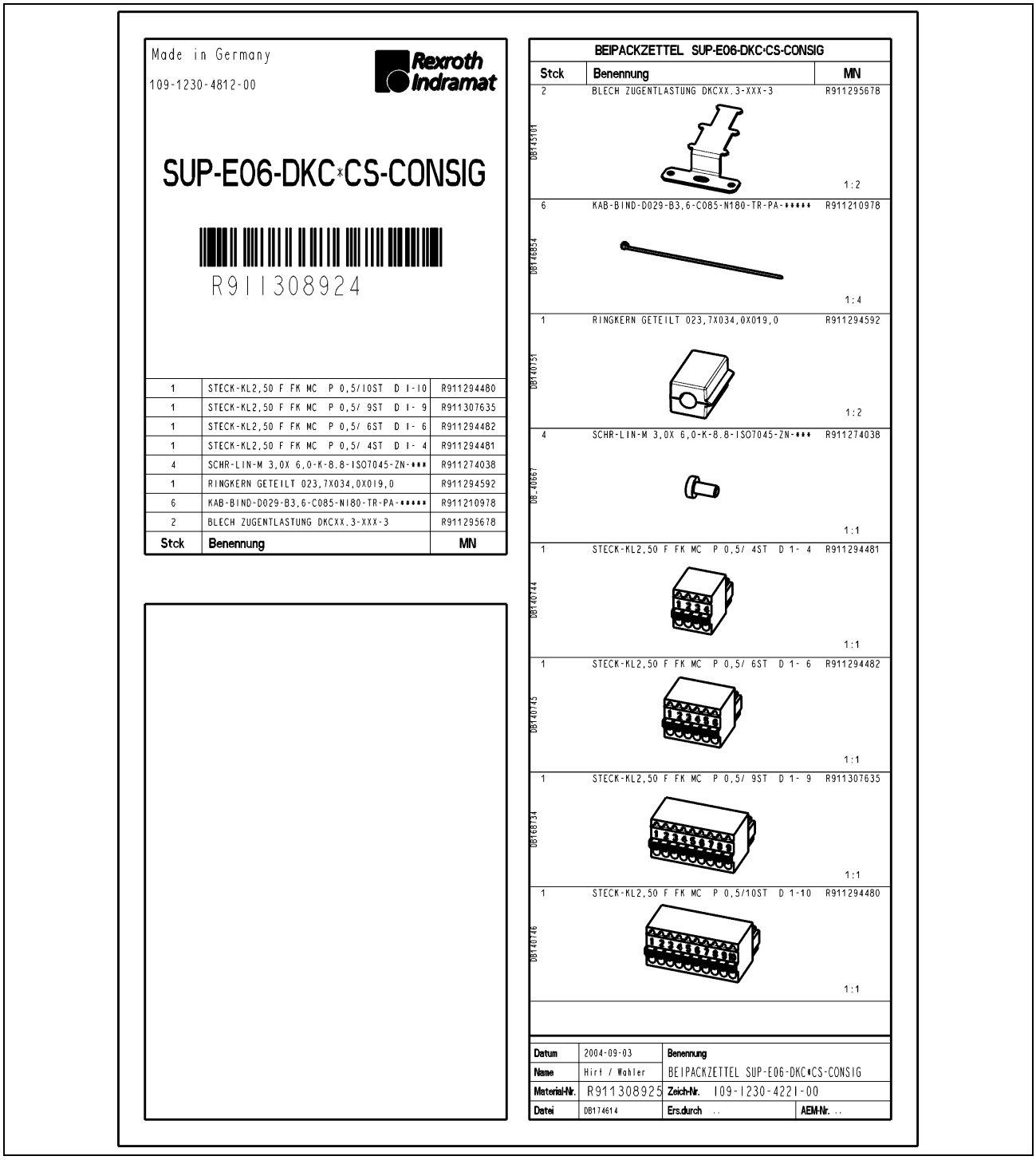

Fig. 10-29: SUP-E01-DKC*CS-CONSIG (packaging slip)

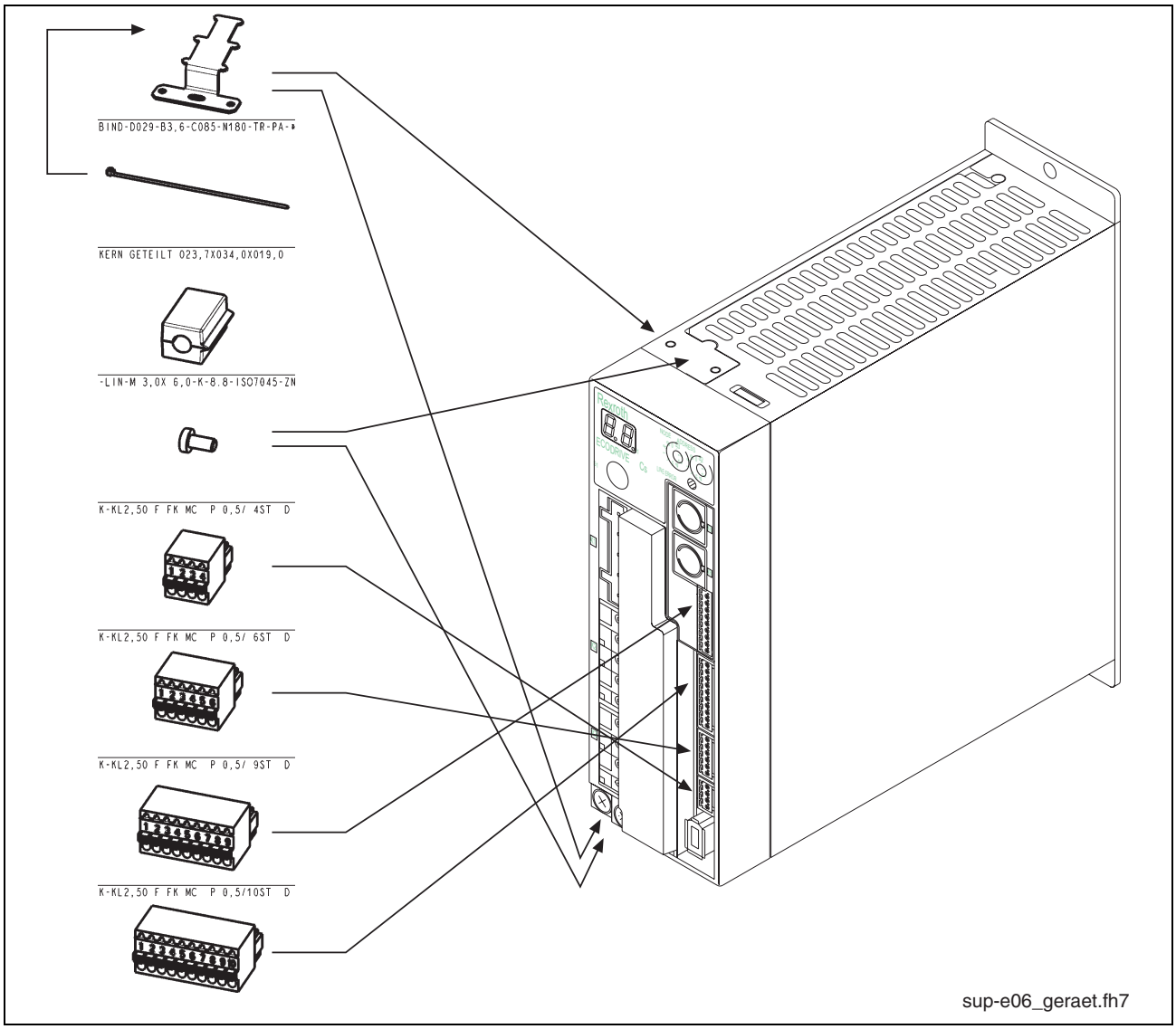

Fig. 10-30: SUP-E06-DKC*CS-CONSIG: connection and mounting accessories

Folding ferrite:

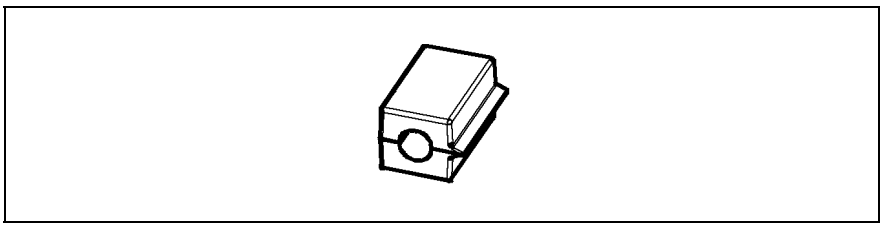

Fig. 10-31: Folding ferrite

Usage of folding ferrite: see page 10-10.

Courtesy of CMA/Flodyne/Hydradyne ▪ Motion Control ▪ Hydraulic ▪ Pneumatic ▪ Electrical ▪ Mechanical ▪ (800) 426-5480 ▪ www.cmafh.com

Courtesy of CMA/Flodyne/Hydradyne ▪ Motion Control ▪ Hydraulic ▪ Pneumatic ▪ Electrical ▪ Mechanical ▪ (800) 426-5480 ▪ www.cmafh.com

10.3 Braking Resistor

Notes

Note: When an external braking resistor is used, the drive has to be informed of this fact by means of the **DriveTop** commissioning software (call in DriveTop by menu item "Drive Functions -> Drive controller").

The internal braking resistor of the drive controller causes a derating of the continuous DC bus power. By connecting an external braking resistor a derating of the continuous DC bus power can be prevented.

With regard to the connection of the external braking resistor see chapter 5.

Identification

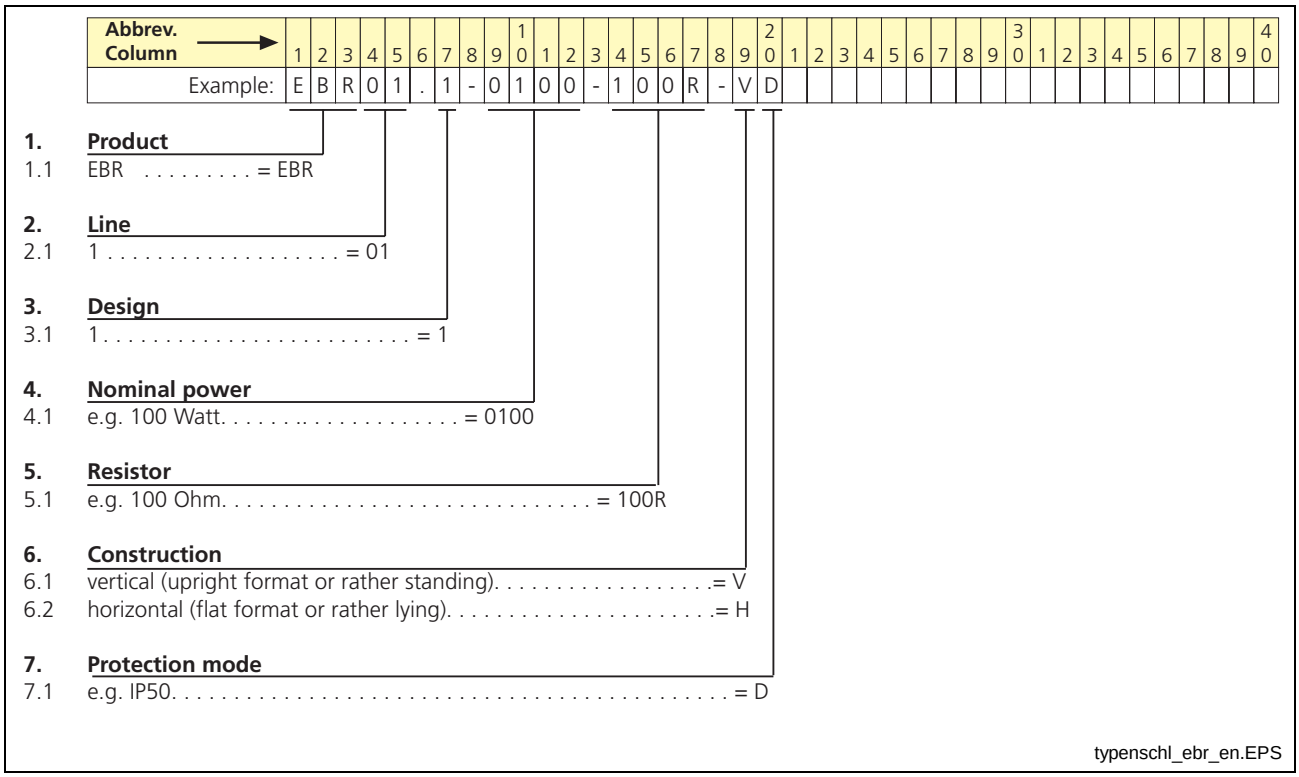

Fig. 10-32: Type code

Courtesy of CMA/Flodyne/Hydradyne ▪ Motion Control ▪ Hydraulic ▪ Pneumatic ▪ Electrical ▪ Mechanical ▪ (800) 426-5480 ▪ www.cmafh.com

Mechanical Data

Dimensions

Upright Format

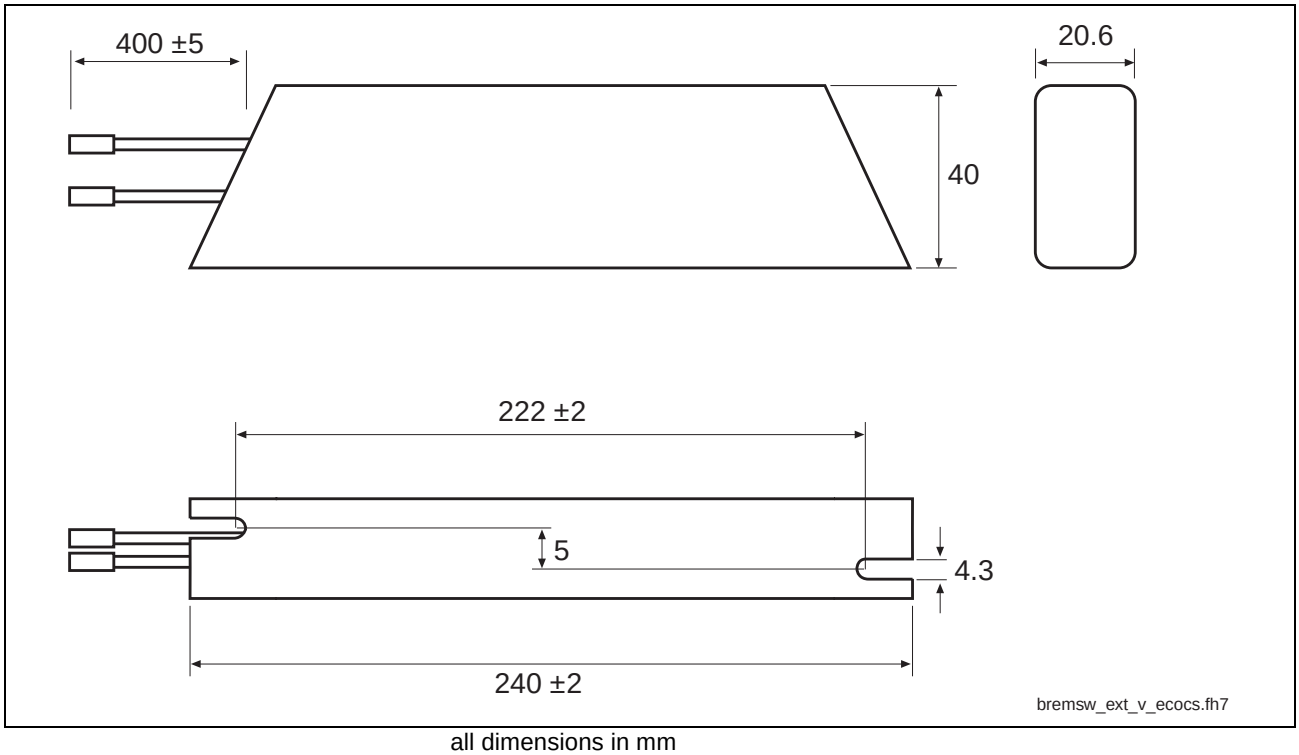

all dimensions in mm

Fig. 10-33: Dimensions

Flat Format

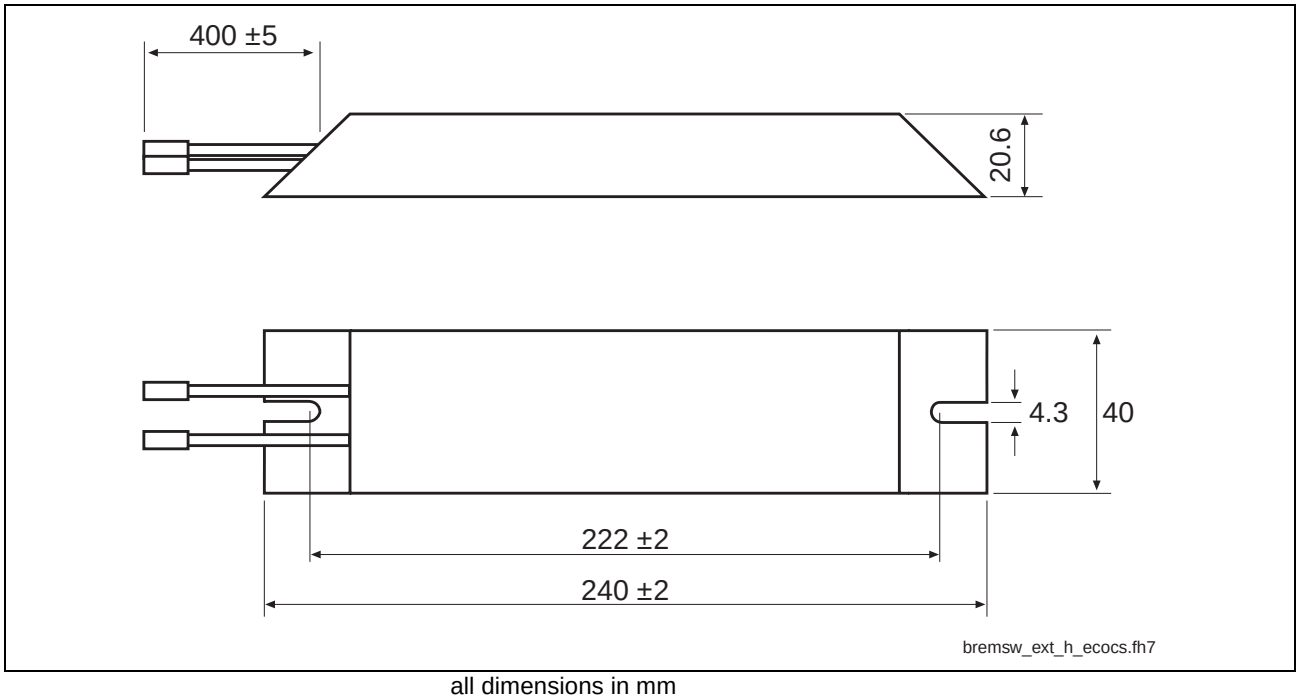

all dimensions in mm

Fig. 10-34: Dimensions

Weight

Approx. 400 g

Courtesy of CMA/Flodyne/Hydradyne ▪ Motion Control ▪ Hydraulic ▪ Pneumatic ▪ Electrical ▪ Mechanical ▪ (800) 426-5480 ▪ www.cmafh.com

Mounting

CAUTION

Danger of damages due to hot parts!

⇒ The surface of a braking resistor can reach temperatures of approx. 230 °C. Pay attention to a sufficient distance to neighboring devices and components.

Mount the braking resistor vertically at the rear panel of the control cabinet. The distance to neighboring devices and components must be at least 40 mm.

Electrical Data

Item	Value
resistance	100 Ohm
continuous bleeder power*	100 W
energy absorption	1000 Ws
Operating voltage between the connection wires	max. 900VDC clocked
Insulation: internal structure	according to UL 508 C
Sparking distance in air and creepage distance from conductive housing of resistor to metallic conductive components (according to EN50178, rating: 600V).	≥ 5.5 mm
Insulation resistance	20 MOhm
Insulation voltage	AC2500V according to EN 50178
Connection wires:	
Length	400 mm ±5 mm
Cross section	1,3 mm^2 (AWG 16)
Wire end sleeve	CuZn - 3 claws resp. 3 notches
Stability of temperature	250 °C
UL-Listing	ULstyle1659/VDE0295 Cl.5) AWM 600V

* Conditions: convection cooling, no heat sink, surface temperature = 250 °C, ambient temperature = 25 °C

Fig. 10-35: Electrical Data

Rexroth Bosch Group

Courtesy of CMA/Flodyne/Hydradyne ▪ Motion Control ▪ Hydraulic ▪ Pneumatic ▪ Electrical ▪ Mechanical ▪ (800) 426-5480 ▪ www.cmafh.com

10.4 DC24V NTM power supplies

Application recommendations

If there is no external DC24V control voltage available, then Rexroth recommends the use of NTM power supply units.

The power supply NTM supplies the control of the holding brake or the control of the I/O's.

Features

- The power supplies contain an overvoltage safety switch with automatic shutdown. After the automatic shutdown device has responded, operation can be resumed by switching the power supply off, briefly, and on again.
- The power supplies always function with a starting current limiter. However, if you switch off and on again within a period of 10 s, the starting current limit do not work!
- The NTM01.1-024-004 and NTM01.1-024-006 power supplies make it possible to measure the voltage applied to the load via cable sensor. If there is a voltage drop, the power supply will increase the output voltage accordingly.
- Installation in enclosed control cabinet required.

Fuse protector Q2

Rexroth recommends a 10 A automatic circuit breaker with tripping characteristics C for DC24V NTM power supplies.

Line filter

Note: Mains filters are available to comply with EMC-limits. For a selection of information see project planning manual "Electromagnetic Compatibility (EMC) in Drive and Control Systems", doc.-type DOK-GENERL-EMV********-PRxx.

Technical data

Designation	Symbol	Unit	NTM01.1-24-002	NTM01.1-24-004	NTM01.1-24-006
Output rated voltage	U_{out}	VDC	24	24	24
Adjustment range		%	+-10	+-10	+-10
Rate current of the 24V output for 45 °C ambient temperature	I_N	A	2.1	3.8	5.5
Output power for 45 °C ambient temperature	P_{OUT}	VA	50	100	150
input current at 230 (115) V	I_{IN}	A	0.61 (1.2)	1.2 (2.2)	1.9 (3.2)
inrush current for 230 (115) V at the power input line when the NTM is switched on. Size the back-up fusing accordingly	I_{EIN}	A	32 (16)	32 (16)	32 (16)
Input voltage	U_N	V	Standard AC 170...265 by changing the bridge circuit setting AC 85...132		
Degree of protection	installation in enclosed control cabinet required				

Fig. 10-36: Technical data for DC24V NTM power supply units

Courtesy of CMA/Flodyne/Hydradyne ▪ Motion Control ▪ Hydraulic ▪ Pneumatic ▪ Electrical ▪ Mechanical ▪ (800) 426-5480 ▪ www.cmafh.com

Dimensional sheets and installation dimensions

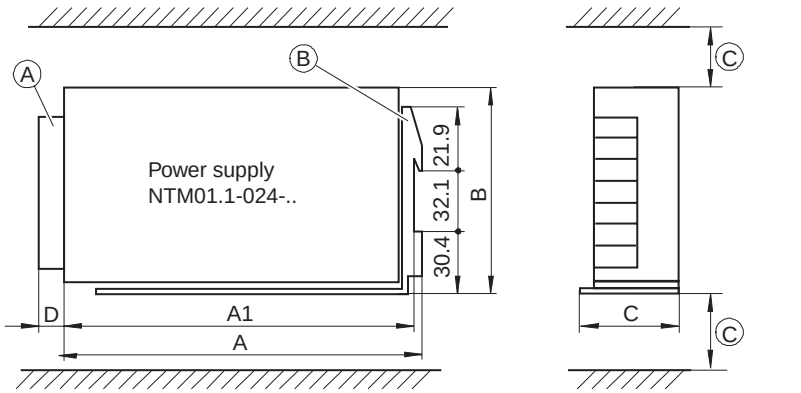

Table of dimensions

INDRAMAT Type of power supply	A	A1	B	C	D
NTM01.1-024-002	173	168.7	100	45	17
NTM01.1-024-004	202	197.7	97	51	20
NTM01.1-024-006	212	207.7	97	70	20

(A) Connecting block
(B) L rails DIN 50
(C) > 20 mm cooling clearance

MB0204F1.FH7

Fig. 10-37: Dimensional sheet DC24V – NTM power supplies

Front views

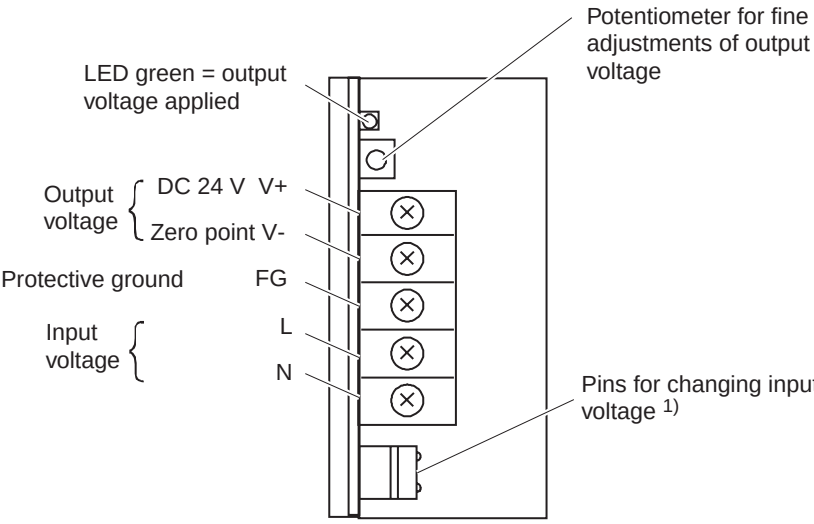

1) Pins not connected = input voltage AC (200-240) V
Pins connected = input voltage AC (100-120) V

FA0201F1.FH7

Fig. 10-38: Front view and terminal designations of the power supply NTM01.1-024-002

Courtesy of CMA/Flodyne/Hydradyne ▪ Motion Control ▪ Hydraulic ▪ Pneumatic ▪ Electrical ▪ Mechanical ▪ (800) 426-5480 ▪ www.cmafh.com

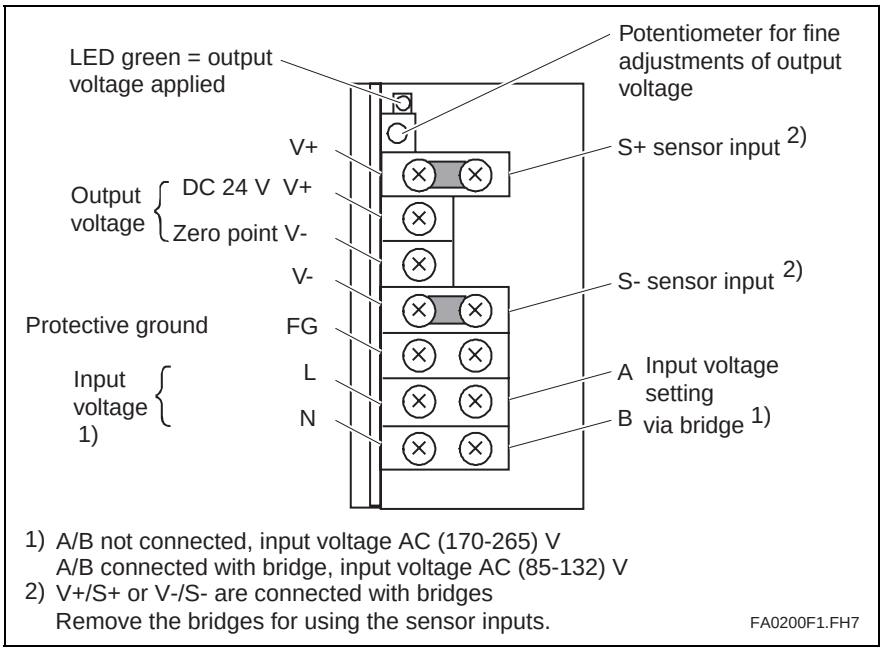

Fig. 10-39: Front view and terminal designation of the power supplies NTM01.1-024-004 and NTM01.1-024-006

Electrical connection

Note: Always use the NTM together with the line filter NFE01.1-250-006. For further information on NFE, see project planning manual "Electromagnetic Compatibility (EMC) in Drive and Control Systems", doc.-type DOK-GENERL-EMV********-PRxx.

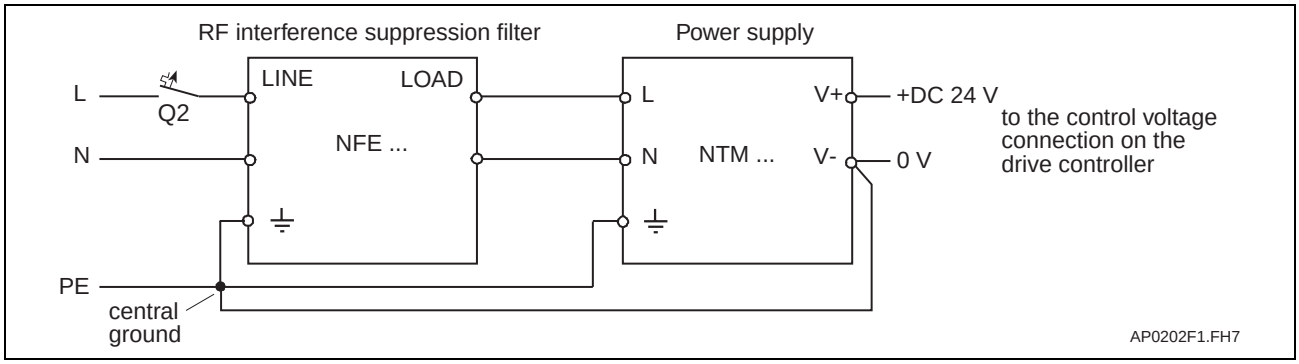

Fig. 10-40: Connecting the power supply to a line filter

Note: The contact bridge between V+/S+ and V-/S- must be removed if sensor inputs are used.

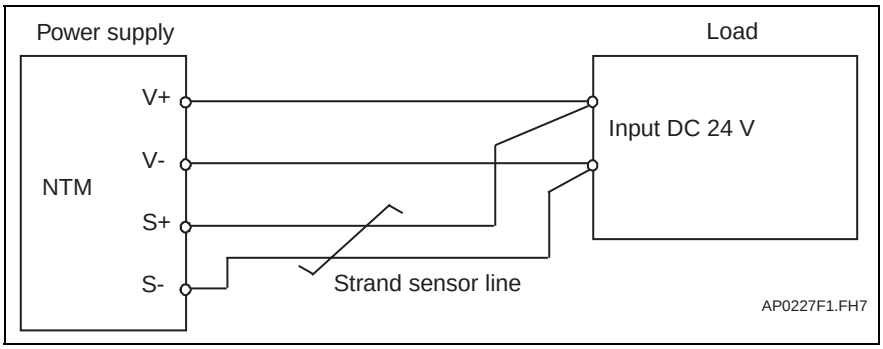

Fig. 10-41: Connecting the sensor cables NTM01.1-024-004 and NTM01.1-024-006

Type code

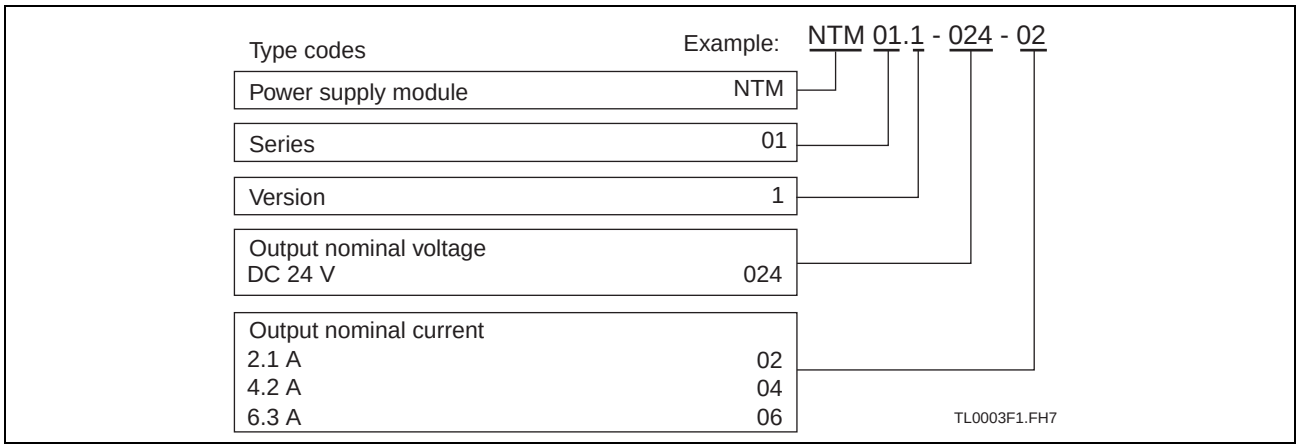

Fig. 10-42: Type code

Courtesy of CMA/Flodyne/Hydradyne ▪ Motion Control ▪ Hydraulic ▪ Pneumatic ▪ Electrical ▪ Mechanical ▪ (800) 426-5480 ▪ www.cmafh.com

Courtesy of CMA/Flodyne/Hydradyne ▪ Motion Control ▪ Hydraulic ▪ Pneumatic ▪ Electrical ▪ Mechanical ▪ (800) 426-5480 ▪ www.cmafh.com

10.5 DST transformers

Selection

Transformers are only needed if the systems voltage exceeds the rated voltage of the drive controller.

Grounded power supply lines

For grounded power supply lines, the line voltage is matched to the rated voltage of the units using autotransformers which are suited to **one specific output voltage range.**

Ungrounded power supply lines

To match the voltage for ungrounded power supply lines, always connect isolating transformers to prevent excess phase to ground voltages.

Autotransformers for Drive Controllers

Select an autotransformer suited to both the line voltage and the power requirements of the system (see chapter 6.6 "Operation on 400/480 V Mains").

Autotransformer DST	part no.
2,00/L/380,460,500-220	R911259937
2,00/S/380,460,500-220	R911225960
2,50/G/400,415,440,460-230-IP	R911264345
2,50/G/400,480,500,525-230-IP	R911269274
2,50/S/380,415,440-220	R911219217
2,50/S/380,415,440,460,500	R911238617

Courtesy of CMA/Flodyne/Hydradyne ▪ Motion Control ▪ Hydraulic ▪ Pneumatic ▪ Electrical ▪ Mechanical ▪ (800) 426-5480 ▪ www.cmafh.com

Technical Data

DST 2,0/S/380,460,500-220

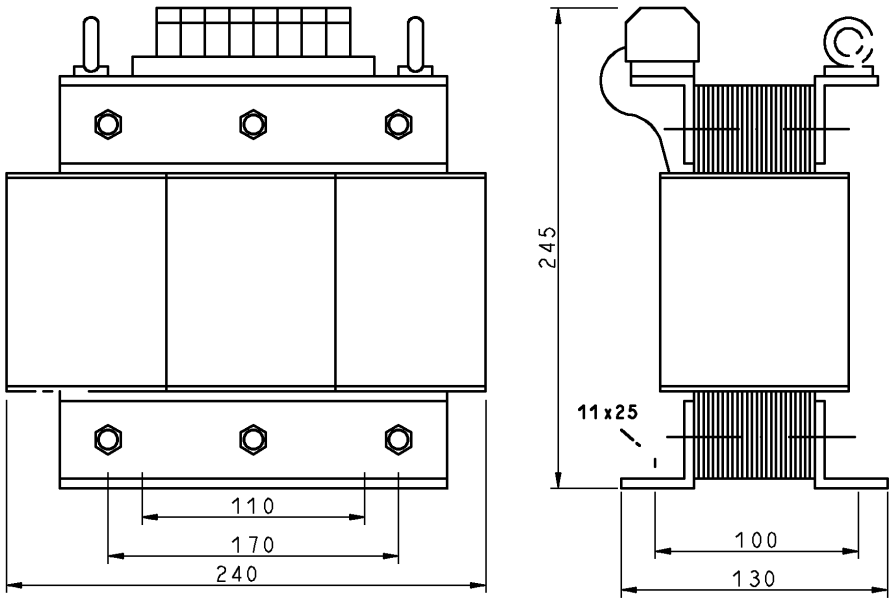

Fig. 10-43: Dimensions

weight	18 kg
terminal	4 mm^2

Fig. 10-44: Data

Courtesy of CMA/Flodyne/Hydradyne ▪ Motion Control ▪ Hydraulic ▪ Pneumatic ▪ Electrical ▪ Mechanical ▪ (800) 426-5480 ▪ www.cmafh.com

DST 2,00/L/380,460,500-220

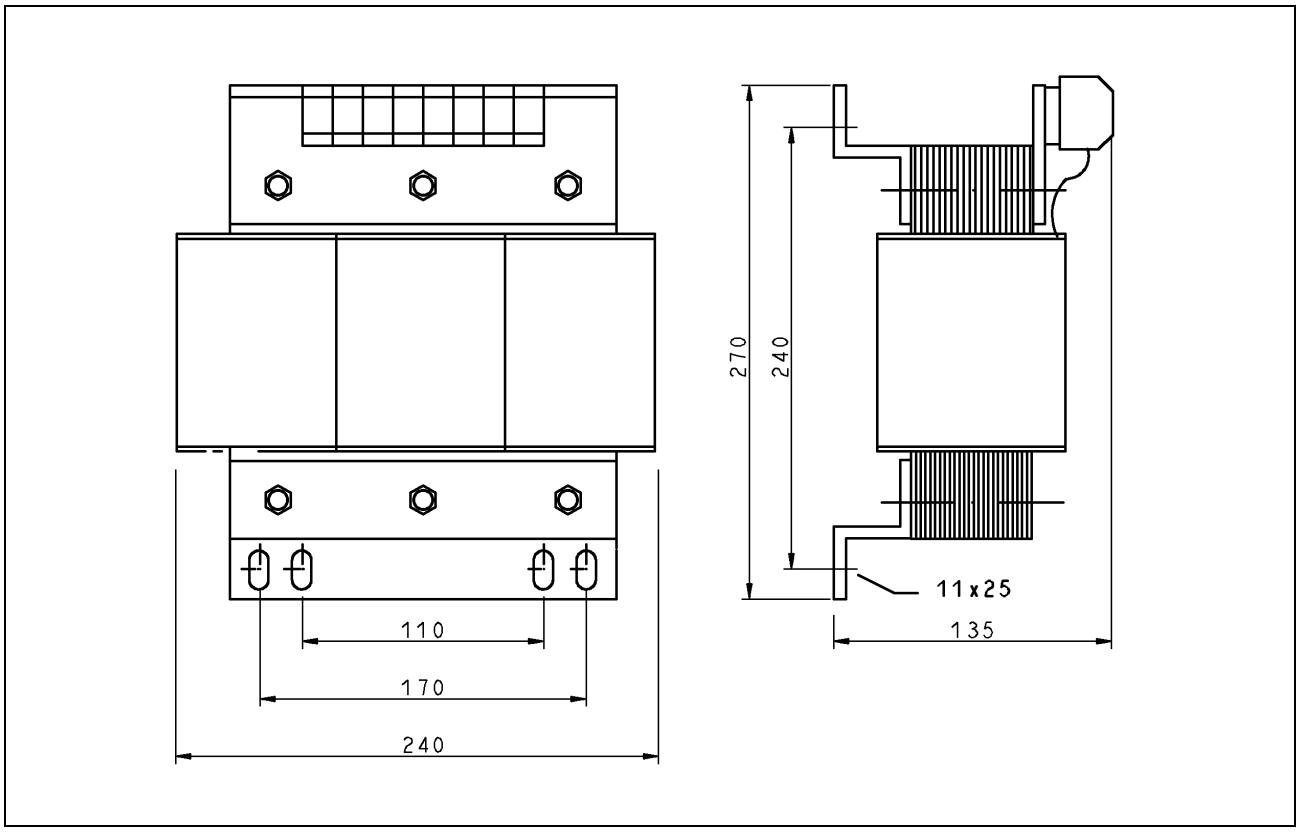

Fig. 10-45: Dimensions

weight	17 kg
terminal	4 mm^2

Fig. 10-46: Data

Courtesy of CMA/Flodyne/Hydradyne ▪ Motion Control ▪ Hydraulic ▪ Pneumatic ▪ Electrical ▪ Mechanical ▪ (800) 426-5480 ▪ www.cmafh.com

DST 2,5/S/380,415,440-220

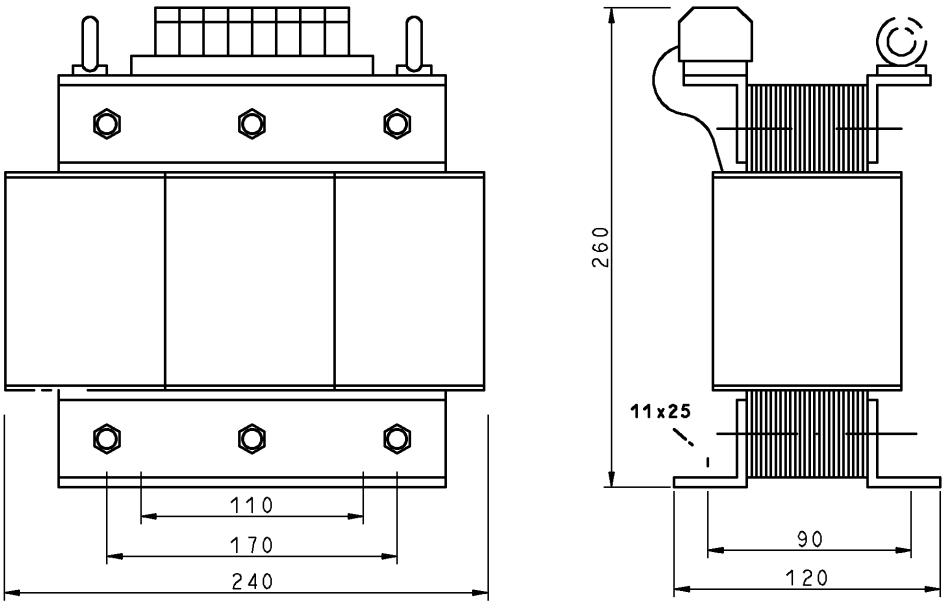

Fig. 10-47: Dimensions

weight	16 kg
terminal	4 mm^2

Fig. 10-48: Data

Courtesy of CMA/Flodyne/Hydradyne ▪ Motion Control ▪ Hydraulic ▪ Pneumatic ▪ Electrical ▪ Mechanical ▪ (800) 426-5480 ▪ www.cmafh.com

DST 2,5/S/380,415,440,460,500-220

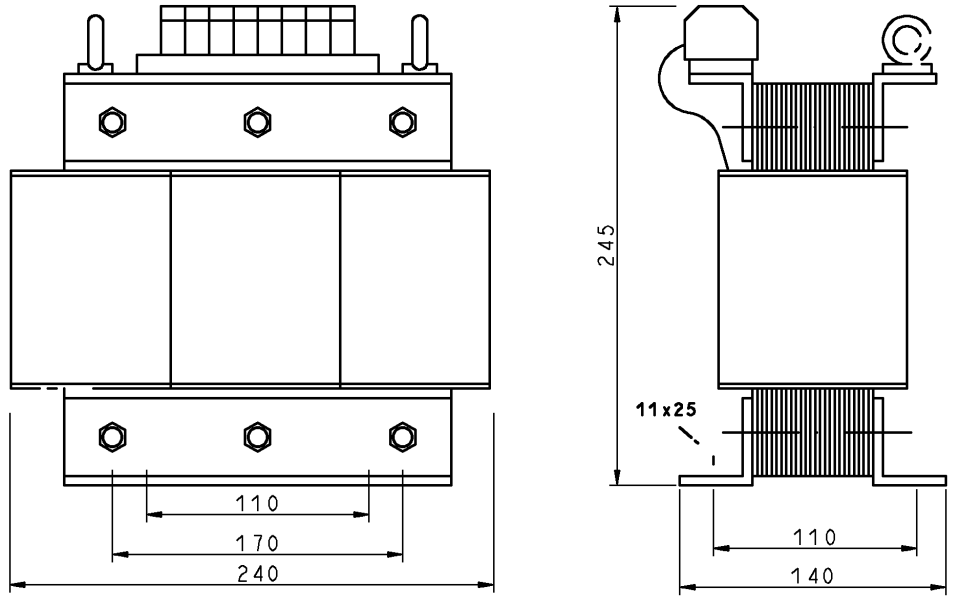

Fig. 10-49: Dimensions

weight	21 kg
terminal	4 mm^2

Fig. 10-50: Data

Courtesy of CMA/Flodyne/Hydradyne ▪ Motion Control ▪ Hydraulic ▪ Pneumatic ▪ Electrical ▪ Mechanical ▪ (800) 426-5480 ▪ www.cmafh.com

DST 2,5/G/400,415,440,460-230-IP

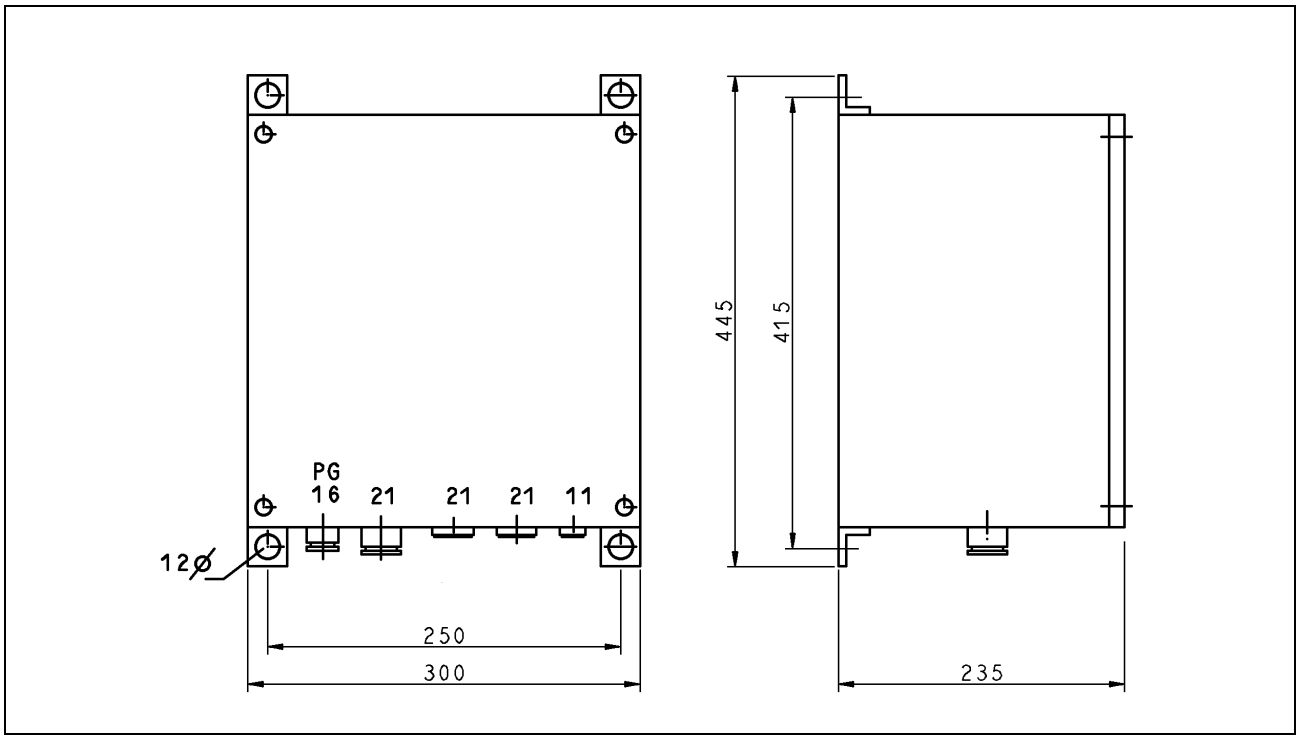

Fig. 10-51: Dimensions

weight	31 kg
terminal	4 mm^2

Fig. 10-52: Data

Courtesy of CMA/Flodyne/Hydradyne ▪ Motion Control ▪ Hydraulic ▪ Pneumatic ▪ Electrical ▪ Mechanical ▪ (800) 426-5480 ▪ www.cmafh.com

DST 2,5/G/400,480,500,525-230-IP

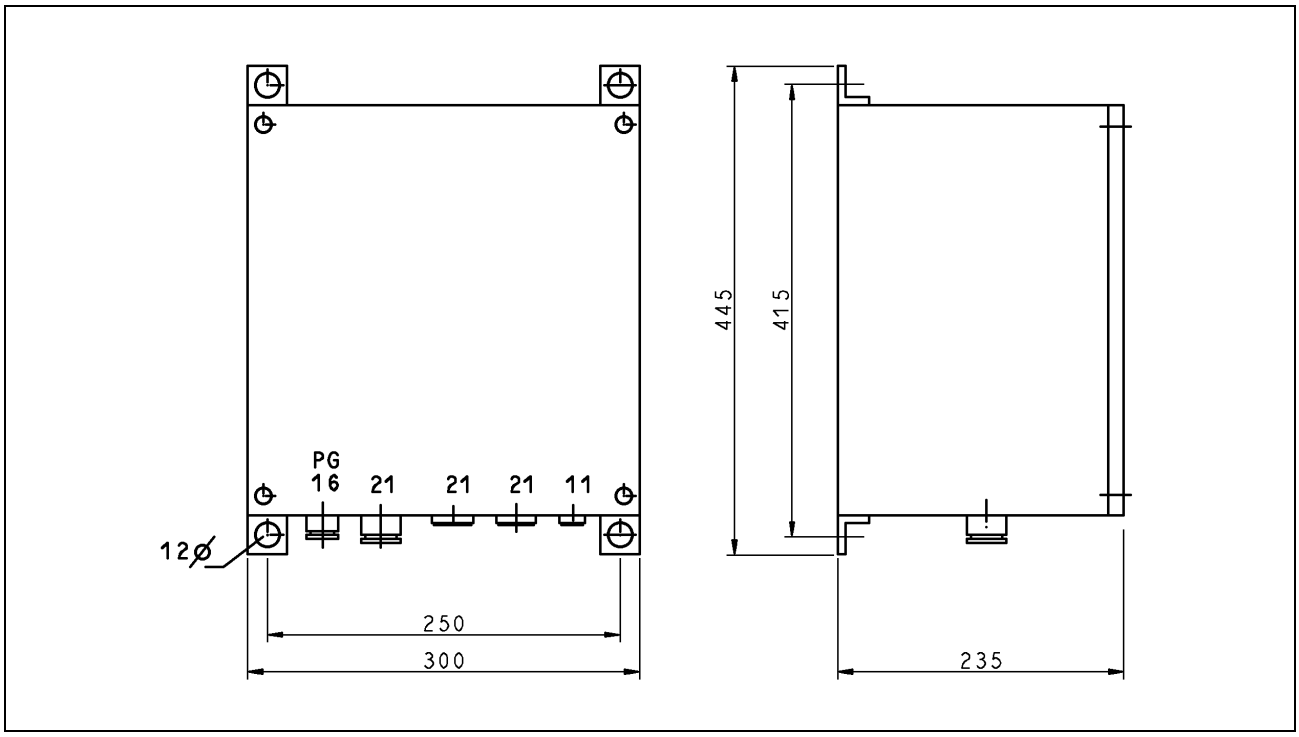

Fig. 10-53: Dimensions

weight	31 kg
terminal	4 mm^2

Fig. 10-54: Data

Courtesy of CMA/Flodyne/Hydradyne ▪ Motion Control ▪ Hydraulic ▪ Pneumatic ▪ Electrical ▪ Mechanical ▪ (800) 426-5480 ▪ www.cmafh.com

Type Code

Abbrev. Column →	1	2	3	4	5	6	7	8	9	10	1	2	3	4	5	6	7	8	9	20	1	2	3	4	5	6	7	8	9	30	1	2	3	4	5	6	7	8	9	40
Example:	T	R	A	F	O		D	S	T		•	4	,	0	0	/	L	/	3	8	0	,	4	1	5	,	4	4	0	-	2	2	0				1	0	M	M

1. Object
1.1 Transformer . . . . = TRAFO

2. Product
2.1 DST. . . . . = DST

3. Nominal power
3.1 2.0 kVA . . . . . = •2,00
3.2 2.5 kVA . . . . . = •2,50
3.3 4.0 kVA . . . . . = •4,00
3.4 5.0 kVA . . . . . = •5,00
3.5 7.5 kVA . . . . . = •7,50
3.6 10.0 kVA . . . . . = 10,00
3.7 12.5 kVA . . . . . = 12,50
3.8 15.0 kVA . . . . . = 15,00
3.9 18.0 kVA . . . . . = 18,00
3.10 20.0 kVA . . . . . = 20,00
3.11 25.0 kVA (for vertical mounting **only**) . . . . . = 25,00
3.12 35.0 kVA (for vertical mounting **only**) . . . . . = 35,00
3.13 50.0 kVA (for vertical mounting **only**) . . . . . = 50,00

4. Construction (Design)
4.1 suitable for mounting into IP55 housing . . . . . = G
4.2 horizontal mounting . . . . . = L
4.3 vertical mounting . . . . . = S

5. Nominal input voltage (Phase-Phase)
5.1 e.g., AC 380 V, AC 415 V, AC 440 V . . . . . = 380, 415, 440

6. Nominal output voltage (Phase-Phase)
6.1 e.g., AC 230 V. . . . . = 220

7. Special design
7.1 Does not apply to standard transformers.
7.2 Frequency: e.g., 100 Hz . . . . . = 100HZ
7.3 max. line diameter: e.g., 10 mm^2 . . . . . = 10MM
7.4 Protecting style: e.g., IP23, in protecting housing ST0 . . . . . = IP23
7.5 Nema-type . . . . . = NEMA
7.6 UL standard . . . . . = UL-N

8. Standard reference

Standard	Title	Edition
DIN EN 60529	Degrees of protection provided by enclosures (IP code) (IEC 60529:1989 + A1:1999); German version EN 60529:1991 + A1:2000	2000-09

Note:
• = Field does not apply

Fig. 10-55:Type code

Rexroth Bosch Group

Courtesy of CMA/Flodyne/Hydradyne ▪ Motion Control ▪ Hydraulic ▪ Pneumatic ▪ Electrical ▪ Mechanical ▪ (800) 426-5480 ▪ www.cmafh.com

10.6 Mains Filter

Note: Detailed information is available in the instructions in the Project Planning Manual "Electromagnetic Compatibility (EMC) in Drive and Control Systems", document typecode DOK-GENERL-EMV********-PRxx-xx-P.

Mains filter	Part no.
NFE02.1-230-008	R911266399
NFE01.1-250-006	R911267874
NFD03.1-480-007	R911286917
NFD03.1-480-016	R911286918

NFE: Single-phase filter
NFD: Three-phase filter

Fig. 10-56: Mains filter

NFE01.1

Dimensions

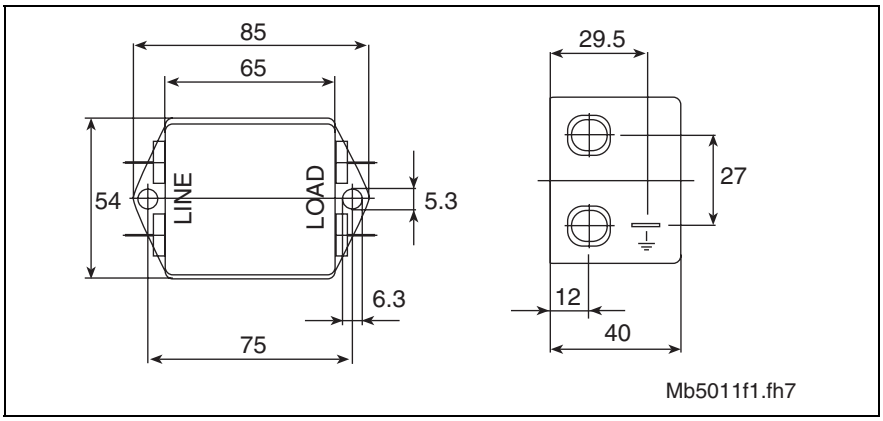

Fig. 10-57: Dimensions

NFE02.1

Dimensions

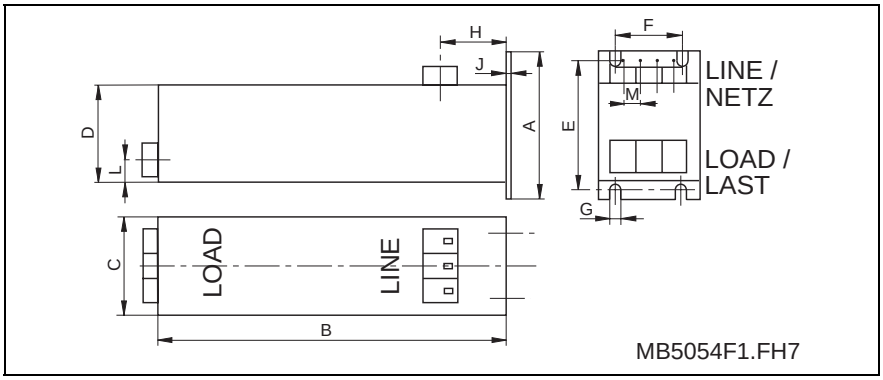

	A	B	C	D	E	F	G	H	J	L	M
NFE02.1-230-008	90	210	60	60	80	40	5,3	40	0,75	15	10

Fig. 10-58: Dimensions

Courtesy of CMA/Flodyne/Hydradyne ▪ Motion Control ▪ Hydraulic ▪ Pneumatic ▪ Electrical ▪ Mechanical ▪ (800) 426-5480 ▪ www.cmafh.com

Courtesy of CMA/Flodyne/Hydradyne ▪ Motion Control ▪ Hydraulic ▪ Pneumatic ▪ Electrical ▪ Mechanical ▪ (800) 426-5480 ▪ www.cmafh.com

NFD03.1

Dimensions

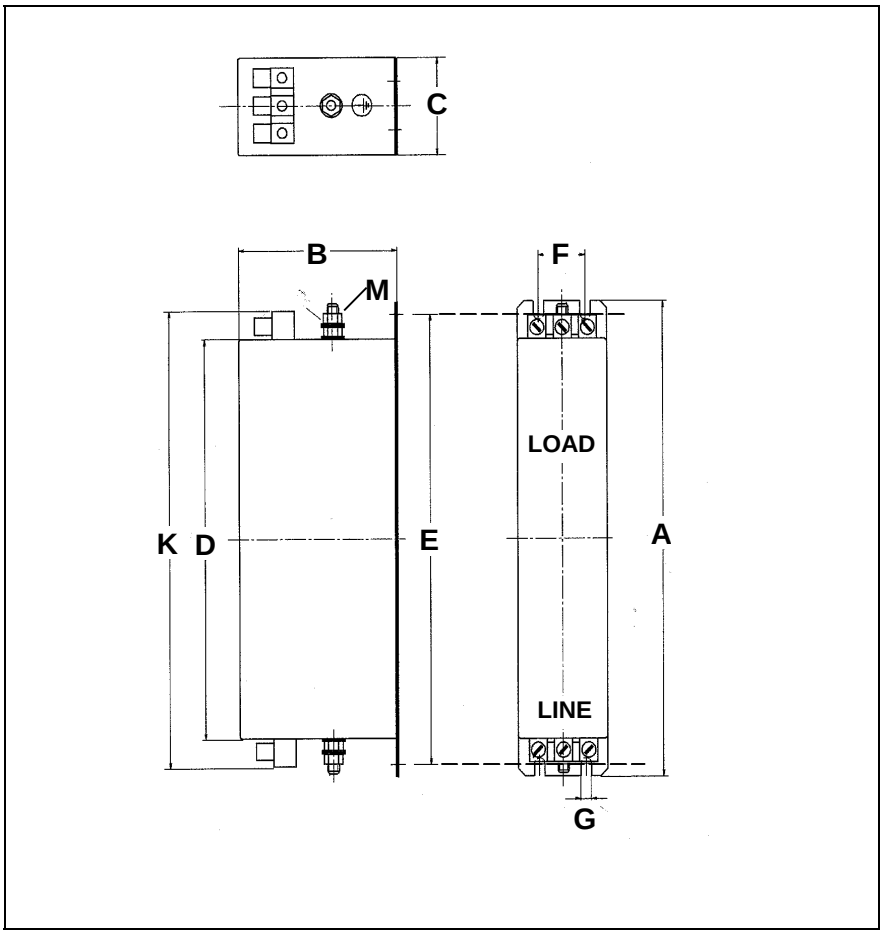

	A	B	C	D	E	F	G	K	M
NFD03.1-480-007	190	90	50	160	180	20	5,4	190	M5
NFD03.1-480-016	250	90	55	220	235	25	5,4	250	M5

Fig. 10-59: Dimensions

Courtesy of CMA/Flodyne/Hydradyne ▪ Motion Control ▪ Hydraulic ▪ Pneumatic ▪ Electrical ▪ Mechanical ▪ (800) 426-5480 ▪ www.cmafh.com

11 Service & Support

11.1 Helpdesk

Unser Kundendienst-Helpdesk im Hauptwerk Lohr am Main steht Ihnen mit Rat und Tat zur Seite. Sie erreichen uns

Our service helpdesk at our headquarters in Lohr am Main, Germany can assist you in all kinds of inquiries. Contact us

- telefonisch - by phone: **+49 (0) 9352 40 50 60**
  über Service Call Entry Center Mo-Fr 07:00-18:00
  - via Service Call Entry Center Mo-Fr 7:00 am - 6:00 pm
- per Fax - by fax: **+49 (0) 9352 40 49 41**
- per e-Mail - by e-mail: **service.svc@boschrexroth.de**

11.2 Service-Hotline

Außerhalb der Helpdesk-Zeiten ist der Service direkt ansprechbar unter

After helpdesk hours, contact our service department directly at

+49 (0) 171 333 88 26

oder - or **+49 (0) 172 660 04 06**

11.3 Internet

Unter **www.boschrexroth.com** finden Sie ergänzende Hinweise zu Service, Reparatur und Training sowie die **aktuellen** Adressen *) unserer auf den folgenden Seiten aufgeführten Vertriebs- und Servicebüros.

- ☐ Verkaufsniederlassungen
- ▒ Niederlassungen mit Kundendienst

Außerhalb Deutschlands nehmen Sie bitte zuerst Kontakt mit unserem für Sie nächstgelegenen Ansprechpartner auf.

*) Die Angaben in der vorliegenden Dokumentation können seit Drucklegung überholt sein.

At **www.boschrexroth.com** you may find additional notes about service, repairs and training in the Internet, as well as the **actual** addresses *) of our sales- and service facilities figuring on the following pages.

- ☐ sales agencies
- ▒ offices providing service

Please contact our sales / service office in your area first.

*) Data in the present documentation may have become obsolete since printing.

11.4 Vor der Kontaktaufnahme... - Before contacting us...

Wir können Ihnen schnell und effizient helfen wenn Sie folgende Informationen bereithalten:

1. detaillierte Beschreibung der Störung und der Umstände.
2. Angaben auf dem Typenschild der betreffenden Produkte, insbesondere Typenschlüssel und Seriennummern.
3. Tel.-/Faxnummern und e-Mail-Adresse, unter denen Sie für Rückfragen zu erreichen sind.

For quick and efficient help, please have the following information ready:

1. Detailed description of the failure and circumstances.
2. Information on the type plate of the affected products, especially type codes and serial numbers.
3. Your phone/fax numbers and e-mail address, so we can contact you in case of questions.

Courtesy of CMA/Flodyne/Hydradyne ▪ Motion Control ▪ Hydraulic ▪ Pneumatic ▪ Electrical ▪ Mechanical ▪ (800) 426-5480 ▪ www.cmafh.com

11.5 Kundenbetreuungsstellen - Sales & Service Facilities

Deutschland – Germany

vom Ausland: (0) nach Landeskennziffer weglassen!
from abroad: don't dial (0) after country code!

Vertriebsgebiet Mitte Germany Centre	SERVICE AUTOMATION	SERVICE AUTOMATION	SERVICE AUTOMATION
Rexroth Indramat GmbH Bgm.-Dr.-Nebel-Str. 2 / Postf. 1357 97816 Lohr am Main / 97803 Lohr **Kompetenz-Zentrum Europa** Tel.: +49 (0)9352 40-0 Fax: +49 (0)9352 40-4885	**CALL ENTRY CENTER** **Helpdesk** **MO – FR** **von 07:00 - 18:00 Uhr** **from 7 am – 6 pm** **Tel. +49 (0) 9352 40 50 60** **Fax +49 (0) 9352 40 49 41** service.svc@boschrexroth.de	**HOTLINE 24 / 7 / 365** **außerhalb der Helpdesk-Zeit** **out of helpdesk hours** **Tel.: +49 (0)172 660 04 06** oder / or **Tel.: +49 (0)171 333 88 26**	**ERSATZTEILE / SPARES** verlängerte Ansprechzeit - extended office time - ♦ nur an Werktagen - only on working days - ♦ von 07:00 - 18:00 Uhr - from 7 am - 6 pm - **Tel. +49 (0) 9352 40 42 22**
Vertriebsgebiet Süd Germany South	Vertriebsgebiet West Germany West	Gebiet Südwest Germany South-West	
Bosch Rexroth AG Landshuter Allee 8-10 80637 München Tel.: +49 (0)89 127 14-0 Fax: +49 (0)89 127 14-490	Bosch Rexroth AG Regionalzentrum West Borsigstrasse 15 40880 Ratingen Tel.: +49 (0)2102 409-0 Fax: +49 (0)2102 409-406 +49 (0)2102 409-430	Bosch Rexroth AG Service-Regionalzentrum Süd-West Siemensstr. 1 70736 Fellbach Tel.: +49 (0)711 51046–0 Fax: +49 (0)711 51046–248	
Vertriebsgebiet Nord Germany North	Vertriebsgebiet Mitte Germany Centre	Vertriebsgebiet Ost Germany East	Vertriebsgebiet Ost Germany East
Bosch Rexroth AG Walsroder Str. 93 30853 Langenhagen Tel.: +49 (0) 511 72 66 57-0 Service: +49 (0) 511 72 66 57-256 Fax: +49 (0) 511 72 66 57-93 Service: +49 (0) 511 72 66 57-783	Bosch Rexroth AG Regionalzentrum Mitte Waldecker Straße 13 64546 Mörfelden-Walldorf Tel.: +49 (0) 61 05 702-3 Fax: +49 (0) 61 05 702-444	Bosch Rexroth AG Beckerstraße 31 09120 Chemnitz Tel.: +49 (0)371 35 55-0 Fax: +49 (0)371 35 55-333	Bosch Rexroth AG Regionalzentrum Ost Walter-Köhn-Str. 4d 04356 Leipzig Tel.: +49 (0)341 25 61-0 Fax: +49 (0)341 25 61-111

Courtesy of CMA/Flodyne/Hydradyne ▪ Motion Control ▪ Hydraulic ▪ Pneumatic ▪ Electrical ▪ Mechanical ▪ (800) 426-5480 ▪ www.cmafh.com

Europa (West) - Europe (West)

vom Ausland: (0) nach Landeskennziffer weglassen, Italien: 0 nach Landeskennziffer mitwählen
from abroad: don't dial (0) after country code, Italy: dial 0 after country code

Austria - Österreich Bosch Rexroth GmbH Electric Drives & Controls Stachegasse 13 1120 Wien Tel.: +43 (0)1 985 25 40 Fax: +43 (0)1 985 25 40-93	Austria – Österreich Bosch Rexroth GmbH Electric Drives & Controls Industriepark 18 4061 Pasching Tel.: +43 (0)7221 605-0 Fax: +43 (0)7221 605-21	Belgium - Belgien Bosch Rexroth NV/SA Henri Genessestraat 1 1070 Bruxelles Tel: +32 (0) 2 451 26 08 Fax: +32 (0) 2 451 27 90 info@boschrexroth.be service@boschrexroth.be	Denmark - Dänemark BEC A/S Zinkvej 6 8900 Randers Tel.: +45 (0)87 11 90 60 Fax: +45 (0)87 11 90 61
Great Britain – Großbritannien Bosch Rexroth Ltd. Electric Drives & Controls Broadway Lane, South Cerney Cirencester, Glos GL7 5UH Tel.: +44 (0)1285 863000 Fax: +44 (0)1285 863030 sales@boschrexroth.co.uk service@boschrexroth.co.uk	Finland - Finnland Bosch Rexroth Oy Electric Drives & Controls Ansatie 6 017 40 Vantaa Tel.: +358 (0)9 84 91-11 Fax: +358 (0)9 84 91-13 60	France - Frankreich Bosch Rexroth SAS Electric Drives & Controls Avenue de la Trentaine (BP. 74) 77503 Chelles Cedex Tel.: +33 (0)164 72-63 22 Fax: +33 (0)164 72-63 20 **Hotline: +33 (0)608 33 43 28**	France - Frankreich Bosch Rexroth SAS Electric Drives & Controls ZI de Thibaud, 20 bd. Thibaud (BP. 1751) 31084 Toulouse Tel.: +33 (0)5 61 43 61 87 Fax: +33 (0)5 61 43 94 12
France – Frankreich Bosch Rexroth SAS Electric Drives & Controls 91, Bd. Irène Joliot-Curie 69634 Vénissieux – Cedex Tel.: +33 (0)4 78 78 53 65 Fax: +33 (0)4 78 78 53 62	Italy - Italien Bosch Rexroth S.p.A. Via G. Di Vittorio, 1 20063 Cernusco S/N.MI **Hotline: +39 02 92 365 563** Tel.: +39 02 92 365 1 Service: +39 02 92 365 300 Fax: +39 02 92 365 500 Service: +39 02 92 365 516	Italy - Italien Bosch Rexroth S.p.A. Via Paolo Veronesi, 250 10148 Torino Tel.: +39 011 224 88 11 Fax: +39 011 224 88 30	Italy - Italien Bosch Rexroth S.p.A. Via Mascia, 1 80053 Castellamare di Stabia NA Tel.: +39 081 8 71 57 00 Fax: +39 081 8 71 68 85
Italy - Italien Bosch Rexroth S.p.A. Via del Progresso, 16 (Zona Ind.) 35020 Padova Tel.: +39 049 8 70 13 70 Fax: +39 049 8 70 13 77	Italy - Italien Bosch Rexroth S.p.A. Via Isonzo, 61 40033 Casalecchio di Reno (Bo) Tel.: +39 051 29 86 430 Fax: +39 051 29 86 490	Netherlands - Niederlande/Holland Bosch Rexroth Services B.V. Technical Services Kruisbroeksestraat 1 (P.O. Box 32) 5281 RV Boxtel Tel.: +31 (0) 411 65 19 51 Fax: +31 (0) 411 67 78 14 **Hotline: +31 (0) 411 65 19 51** services@boschrexroth.nl	Netherlands – Niederlande/Holland Bosch Rexroth B.V. Kruisbroeksestraat 1 (P.O. Box 32) 5281 RV Boxtel Tel.: +31 (0) 411 65 16 40 Fax: +31 (0) 411 65 14 83 www.boschrexroth.nl
Norway - Norwegen Bosch Rexroth AS Electric Drives & Controls Berghagan 1 or: Box 3007 1405 Ski-Langhus 1402 Ski Tel.: +47 (0) 64 86 41 00 Fax: +47 (0) 64 86 90 62 **Hotline: +47 (0)64 86 94 82** jul.ruud@rexroth.no	Spain - Spanien Bosch Rexroth S.A. Electric Drives & Controls Centro Industrial Santiga Obradors s/n 08130 Santa Perpetua de Mogoda Barcelona Tel.: +34 9 37 47 94 00 Fax: +34 9 37 47 94 01	Spain – Spanien Goimendi S.A. Electric Drives & Controls Parque Empresarial Zuatzu C/ Francisco Grandmontagne no.2 20018 San Sebastian Tel.: +34 9 43 31 84 21 - service: +34 9 43 31 84 56 Fax: +34 9 43 31 84 27 - service: +34 9 43 31 84 60 sat.indramat@goimendi.es	Sweden - Schweden Bosch Rexroth AB Electric Drives & Controls - Varuvägen 7 (Service: Konsumentvägen 4, Älfsjö) 125 81 Stockholm Tel.: +46 (0)8 727 92 00 Fax: +46 (0)8 647 32 77
Sweden - Schweden Bosch Rexroth AB Electric Drives & Controls Ekvändan 7 254 67 Helsingborg Tel.: +46 (0) 42 38 88 -50 Fax: +46 (0) 42 38 88 -74	Switzerland East - Schweiz Ost Bosch Rexroth Schweiz AG Electric Drives & Controls Hemrietstrasse 2 8863 Buttikon Tel. +41 (0) 55 46 46 111 Fax +41 (0) 55 46 46 222	Switzerland West - Schweiz West Bosch Rexroth Suisse SA Av. Général Guisan 26 1800 Vevey 1 Tel.: +41 (0)21 632 84 20 Fax: +41 (0)21 632 84 21	

Courtesy of CMA/Flodyne/Hydradyne ▪ Motion Control ▪ Hydraulic ▪ Pneumatic ▪ Electrical ▪ Mechanical ▪ (800) 426-5480 ▪ www.cmafh.com

Europa (Ost) - Europe (East)

vom Ausland: (0) nach Landeskennziffer weglassen
from abroad: don't dial (0) after country code

Czech Republic - Tschechien Bosch -Rexroth, spol.s.r.o. Hviezdoslavova 5 627 00 Brno Tel.: +420 (0)5 48 126 358 Fax: +420 (0)5 48 126 112	Czech Republic - Tschechien DEL a.s. Strojírenská 38 591 01 Zdar nad Sázavou Tel.: +420 566 64 3144 Fax: +420 566 62 1657	Hungary - Ungarn Bosch Rexroth Kft. Angol utca 34 1149 Budapest Tel.: +36 (1) 422 3200 Fax: +36 (1) 422 3201	Poland – Polen Bosch Rexroth Sp.zo.o. ul. Staszica 1 05-800 Pruszków Tel.: +48 22 738 18 00 – service: +48 22 738 18 46 Fax: +48 22 758 87 35 – service: +48 22 738 18 42
Poland – Polen Bosch Rexroth Sp.zo.o. Biuro Poznan ul. Dabrowskiego 81/85 60-529 Poznan Tel.: +48 061 847 64 62 /-63 Fax: +48 061 847 64 02	Romania - Rumänien East Electric S.R.L. Bdul Basarabia no.250, sector 3 73429 Bucuresti Tel./Fax:: +40 (0)21 255 35 07 +40 (0)21 255 77 13 Fax: +40 (0)21 725 61 21 eastel@rdsnet.ro	Romania - Rumänien Bosch Rexroth Sp.zo.o. Str. Drobety nr. 4-10, app. 14 70258 Bucuresti, Sector 2 Tel.: +40 (0)1 210 48 25 +40 (0)1 210 29 50 Fax: +40 (0)1 210 29 52	Russia - Russland Bosch Rexroth OOO Wjatskaja ul. 27/15 127015 Moskau Tel.: +7-095-785 74 78 +7-095 785 74 79 Fax: +7 095 785 74 77 laura.kanina@boschrexroth.ru
Russia Belarus - Weissrussland ELMIS 10, Internationalnaya 246640 Gomel, Belarus Tel.: +375/ 232 53 42 70 +375/ 232 53 21 69 Fax: +375/ 232 53 37 69 elmis_ltd@yahoo.com	Turkey - Türkei Bosch Rexroth Otomasyon San & Tic. A..S. Fevzi Cakmak Cad No. 3 34630 Sefaköy Istanbul Tel.: +90 212 413 34 00 Fax: +90 212 413 34 17 www.boschrexroth.com.tr	Turkey - Türkei Servo Kontrol Ltd. Sti. Perpa Ticaret Merkezi B Blok Kat: 11 No: 1609 80270 Okmeydani-Istanbul Tel: +90 212 320 30 80 Fax: +90 212 320 30 81 remzi.sali@servokontrol.com www.servokontrol.com	Slowenia - Slowenien DOMEL Otoki 21 64 228 Zelezniki Tel.: +386 5 5117 152 Fax: +386 5 5117 225 brane.ozebek@domel.si

Courtesy of CMA/Flodyne/Hydradyne ▪ Motion Control ▪ Hydraulic ▪ Pneumatic ▪ Electrical ▪ Mechanical ▪ (800) 426-5480 ▪ www.cmafh.com

Africa, Asia, Australia – incl. Pacific Rim

Australia - Australien AIMS - Australian Industrial Machinery Services Pty. Ltd. 28 Westside Drive Laverton North Vic 3026 Melbourne Tel.: +61 3 93 14 3321 Fax: +61 3 93 14 3329 **Hotlines: +61 3 93 14 3321** **+61 4 19 369 195** enquires@aimservices.com.au	Australia - Australien Bosch Rexroth Pty. Ltd. No. 7, Endeavour Way Braeside Victoria, 31 95 Melbourne Tel.: +61 3 95 80 39 33 Fax: +61 3 95 80 17 33 mel@rexroth.com.au	China Shanghai Bosch Rexroth Hydraulics & Automation Ltd. Waigaoqiao, Free Trade Zone No.122, Fu Te Dong Yi Road Shanghai 200131 - P.R.China Tel.: +86 21 58 66 30 30 Fax: +86 21 58 66 55 23 richard.yang_sh@boschrexroth.com.cn gf.zhu_sh@boschrexroth.com.cn	China Shanghai Bosch Rexroth Hydraulics & Automation Ltd. 4/f, Marine Tower No.1, Pudong Avenue Shanghai 200120 - P.R.China Tel: +86 21 68 86 15 88 Fax: +86 21 58 40 65 77
China Bosch Rexroth China Ltd. 15/F China World Trade Center 1, Jianguomenwai Avenue Beijing 100004, P.R.China Tel.: +86 10 65 05 03 80 Fax: +86 10 65 05 03 79	China Bosch Rexroth China Ltd. Guangzhou Repres. Office Room 1014-1016, Metro Plaza, Tian He District, 183 Tian He Bei Rd Guangzhou 510075, P.R.China Tel.: +86 20 8755-0030 +86 20 8755-0011 Fax: +86 20 8755-2387	China Bosch Rexroth (China) Ltd. A-5F., 123 Lian Shan Street Sha He Kou District Dalian 116 023, P.R.China Tel.: +86 411 46 78 930 Fax: +86 411 46 78 932	China Melchers GmbH BRC-SE, Tightening & Press-fit 13 Floor Est Ocean Centre No.588 Yanan Rd. East 65 Yanan Rd. West Shanghai 200001 Tel.: +86 21 6352 8848 Fax: +86 21 6351 3138
Hongkong Bosch Rexroth (China) Ltd. 6th Floor, Yeung Yiu Chung No.6 Ind Bldg. 19 Cheung Shun Street Cheung Sha Wan, Kowloon, Hongkong Tel.: +852 22 62 51 00 Fax: +852 27 41 33 44 alexis.siu@boschrexroth.com.hk	India - Indien Bosch Rexroth (India) Ltd. Electric Drives & Controls Plot. No.96, Phase III Peenya Industrial Area Bangalore – 560058 Tel.: +91 80 51 17 0-211...-218 Fax: +91 80 83 94 345 +91 80 83 97 374 mohanvelu.t@boschrexroth.co.in	India - Indien Bosch Rexroth (India) Ltd. Electric Drives & Controls Advance House, II Floor Ark Industrial Compound Narol Naka, Makwana Road Andheri (East), Mumbai - 400 059 Tel.: +91 22 28 56 32 90 +91 22 28 56 33 18 Fax: +91 22 28 56 32 93 singh.op@boschrexroth.co.in	India - Indien Bosch Rexroth (India) Ltd. S-10, Green Park Extension New Delhi – 110016 Tel.: +91 11 26 56 65 25 +91 11 26 56 65 27 Fax: +91 11 26 56 68 87 koul.rp@boschrexroth.co.in
Indonesia - Indonesien PT. Bosch Rexroth Building # 202, Cilandak Commercial Estate Jl. Cilandak KKO, Jakarta 12560 Tel.: +62 21 7891169 (5 lines) Fax: +62 21 7891170 - 71 rudy.karimun@boschrexroth.co.id	Japan Bosch Rexroth Automation Corp. Service Center Japan Yutakagaoka 1810, Meito-ku, NAGOYA 465-0035, Japan Tel.: +81 52 777 88 41 +81 52 777 88 53 +81 52 777 88 79 Fax: +81 52 777 89 01	Japan Bosch Rexroth Automation Corp. Electric Drives & Controls 2F, I.R. Building Nakamachidai 4-26-44, Tsuzuki-ku YOKOHAMA 224-0041, Japan Tel.: +81 45 942 72 10 Fax: +81 45 942 03 41	Korea Bosch Rexroth-Korea Ltd. Electric Drives and Controls Bongwoo Bldg. 7FL, 31-7, 1Ga Jangchoong-dong, Jung-gu Seoul, 100-391 Tel.: +82 234 061 813 Fax: +82 222 641 295
Korea Bosch Rexroth-Korea Ltd. 1515-14 Dadae-Dong, Saha-gu Electric Drives & Controls Pusan Metropolitan City, 604-050 Tel.: +82 51 26 00 741 Fax: +82 51 26 00 747 eunkyong.kim@boschrexroth.co.kr	Malaysia Bosch Rexroth Sdn.Bhd. 11, Jalan U8/82, Seksyen U8 40150 Shah Alam Selangor, Malaysia Tel.: +60 3 78 44 80 00 Fax: +60 3 78 45 48 00 hockhwa@hotmail.com rexroth1@tm.net.my	Singapore - Singapur Bosch Rexroth Pte Ltd 15D Tuas Road Singapore 638520 Tel.: +65 68 61 87 33 Fax: +65 68 61 18 25 sanjay.nemade @boschrexroth.com.sg	South Africa - Südafrika TECTRA Automation (Pty) Ltd. 71 Watt Street, Meadowdale Edenvale 1609 Tel.: +27 11 971 94 00 Fax: +27 11 971 94 40 **Hotline: +27 82 903 29 23** georgv@tectra.co.za
Taiwan Bosch Rexroth Co., Ltd. Taichung Industrial Area No.19, 38 Road Taichung, Taiwan 407, R.O.C. Tel : +886 - 4 -235 08 383 Fax: +886 - 4 -235 08 586 jim.lin@boschrexroth.com.tw david.lai@boschrexroth.com.tw	Taiwan Bosch Rexroth Co., Ltd. Tainan Branch No. 17, Alley 24, Lane 737 Chung Cheng N.Rd. Yungkang Tainan Hsien, Taiwan, R.O.C. Tel : +886 - 6 –253 6565 Fax: +886 - 6 –253 4754 charlie.chen@boschrexroth.com.tw	Thailand NC Advance Technology Co. Ltd. 59/76 Moo 9 Ramintra road 34 Tharang, Bangkhen, Bangkok 10230 Tel.: +66 2 943 70 62 +66 2 943 71 21 Fax: +66 2 509 23 62 Hotline +66 1 984 61 52 sonkawin@hotmail.com	

Rexroth Bosch Group

Courtesy of CMA/Flodyne/Hydradyne ▪ Motion Control ▪ Hydraulic ▪ Pneumatic ▪ Electrical ▪ Mechanical ▪ (800) 426-5480 ▪ www.cmafh.com

Nordamerika – North America

USA Headquarters - Hauptniederlassung Bosch Rexroth Corporation Electric Drives & Controls 5150 Prairie Stone Parkway Hoffman Estates, IL 60192-3707 Tel.: +1 847 6 45 36 00 Fax: +1 847 6 45 62 01 servicebrc@boschrexroth-us.com repairbrc@boschrexroth-us.com	USA Central Region - Mitte Bosch Rexroth Corporation Electric Drives & Controls Central Region Technical Center 1701 Harmon Road Auburn Hills, MI 48326 Tel.: +1 248 3 93 33 30 Fax: +1 248 3 93 29 06	USA Southeast Region - Südwest Bosch Rexroth Corporation Electric Drives & Controls Southeastern Technical Center 3625 Swiftwater Park Drive Suwanee, Georgia 30124 Tel.: +1 770 9 32 32 00 Fax: +1 770 9 32 19 03	**USA SERVICE-HOTLINE** - 7 days x 24hrs - **+1-800-REX-ROTH** **+1 800 739 7684**
USA East Region – Ost Bosch Rexroth Corporation Electric Drives & Controls Charlotte Regional Sales Office 14001 South Lakes Drive Charlotte, North Carolina 28273 Tel.: +1 704 5 83 97 62 +1 704 5 83 14 86	USA Northeast Region – Nordost Bosch Rexroth Corporation Electric Drives & Controls Northeastern Technical Center 99 Rainbow Road East Granby, Connecticut 06026 Tel.: +1 860 8 44 83 77 Fax: +1 860 8 44 85 95	USA West Region – West Bosch Rexroth Corporation 7901 Stoneridge Drive, Suite 220 Pleasant Hill, California 94588 Tel.: +1 925 227 10 84 Fax: +1 925 227 10 81	
Canada East - Kanada Ost Bosch Rexroth Canada Corporation Burlington Division 3426 Mainway Drive Burlington, Ontario Canada L7M 1A8 Tel.: +1 905 335 5511 Fax: +1 905 335 4184 **Hotline: +1 905 335 5511** michael.moro@boschrexroth.ca	Canada West - Kanada West Bosch Rexroth Canada Corporation 5345 Goring St. Burnaby, British Columbia Canada V7J 1R1 Tel. +1 604 205 5777 Fax +1 604 205 6944 **Hotline: +1 604 205 5777** david.gunby@boschrexroth.ca	Mexico Bosch Rexroth Mexico S.A. de C.V. Calle Neptuno 72 Unidad Ind. Vallejo 07700 Mexico, D.F. Tel.: +52 55 57 54 17 11 Fax: +52 55 57 54 50 73 mariofelipe.hernandez@boschrexroth.com.mx	Mexico Bosch Rexroth S.A. de C.V. Calle Argentina No 3913 Fracc. las Torres 64930 Monterrey, N.L. Tel.: +52 81 83 65 22 53 +52 81 83 65 89 11 +52 81 83 49 80 91 Fax: +52 81 83 65 52 80

Südamerika – South America

Argentina - Argentinien Bosch Rexroth S.A.I.C. "The Drive & Control Company" Rosario 2302 B1606DLD Carapachay Provincia de Buenos Aires Tel.: +54 11 4756 01 40 +54 11 4756 02 40 +54 11 4756 03 40 +54 11 4756 04 40 Fax: +54 11 4756 01 36 +54 11 4721 91 53 victor.jabif@boschrexroth.com.ar	Argentina - Argentinien NAKASE Servicio Tecnico CNC Calle 49, No. 5764/66 B1653AOX Villa Balester Provincia de Buenos Aires Tel.: +54 11 4768 36 43 Fax: +54 11 4768 24 13 **Hotline: +54 11 155 307 6781** nakase@usa.net nakase@nakase.com gerencia@nakase.com (Service)	Brazil - Brasilien Bosch Rexroth Ltda. Av. Tégula, 888 Ponte Alta, Atibaia SP CEP 12942-440 Tel.: +55 11 4414 56 92 +55 11 4414 56 84 Fax sales: +55 11 4414 57 07 Fax serv.: +55 11 4414 56 86 alexandre.wittwer@rexroth.com.br	Brazil - Brasilien Bosch Rexroth Ltda. R. Dr.Humberto Pinheiro Vieira, 100 Distrito Industrial [Caixa Postal 1273] 89220-390 Joinville - SC Tel./Fax: +55 47 473 58 33 Mobil: +55 47 9974 6645 prochnow@zaz.com.br
Columbia - Kolumbien Reflutec de Colombia Ltda. Calle 37 No. 22-31 Santafé de Bogotá, D.C. Colombia Tel.: +57 1 368 82 67 +57 1 368 02 59 Fax: +57 1 268 97 37 reflutec@etb.net.co			

Courtesy of CMA/Flodyne/Hydradyne ▪ Motion Control ▪ Hydraulic ▪ Pneumatic ▪ Electrical ▪ Mechanical ▪ (800) 426-5480 ▪ www.cmafh.com

12 Index

4

400/480 V mains 6-16

A

absolute encoder 8-36
  battery 8-44
accessories 10-7
additional components 10-1
address switch 4-16
ambient and operating conditions
  drive controllers 4-7
  motor 8-25
Analog/Parallel Interface 5-23
appropriate use 2-1
assembly
  encoder adapter 10-14
  master communication module 5-45
  motor 8-40
autotransformer 10-30

B

basic device 1-2
battery
  changing 8-45
  data 10-12
  for absolute encoder 8-44
  refresh 8-45
  safety 3-11
  service life 8-44
Bb 6-18
Bb1, Bb2 5-16
bearing
  load 8-32
  service life 8-33
Br+, Br- 5-18
brake
  connection 5-18
  holding brake 8-29
braking resistor
  connection 5-8
  data 10-23

C

cable
  encoder 10-3
  encoder emulation RKG0008 10-5
  motor 5-10, 10-1
  RS232 10-6
cable duct 7-6
CANopen interface 5-43
Cartesian Motion Systems 8-46
CE label 4-17
changing
  battery 8-45
choke
  connection 5-7
CMS 8-46
combination
  drive controller - motor 1-4
components
  additional 10-1
configuration 1-2

Courtesy of CMA/Flodyne/Hydradyne ▪ Motion Control ▪ Hydraulic ▪ Pneumatic ▪ Electrical ▪ Mechanical ▪ (800) 426-5480 ▪ www.cmafh.com

connection
braking resistor 5-8
choke 5-7
encoder 5-12
ground 5-11
holding brake 5-18
mains and supply voltage 6-1
motor 5-9
continuous current at standstill 8-7
continuous torque at standstill 8-7
control cabinet
construction 7-1
multiple line structure 7-2
wire routing 7-6
control circuits
for the mains connection 6-18
with E-Stop 6-19
control voltage
data 4-15
cooling ribs 8-43
cooling units 7-3
C-UL listing 4-17
cycle duration
motor 8-6

D

data
ambient and operating conditions (drive controllers) 4-7
ambient and operating conditions (motor) 8-25
electrical (drive controller) 4-9
mechanical (drive controller) 4-1
power section 4-9
technical data (motor) 8-6
DC24V NTM power supplies 10-26
degree of protection
motor 8-26
derating 4-12
device configurations 1-2
DeviceNet interface
with COMBICON connector 5-39
with sealed micro-style connector 5-41
diagnostic display 4-16
digital inputs 5-13
digital outputs 5-15
dimensional drawings
drive controller 4-1
DKC01.3 5-23
DKC02.3 5-31
DKC03.3 5-33
DKC05.3 5-43
DKC06.3 5-39
DKC16.3 5-41
DL1, DL2 5-7
drive address 4-16
drive controller
additional components 10-1
combination with motors 1-4
configuration 1-2
degree of protection 4-7
index 9-2
individual components 1-2
mass 4-6
materials 4-6
mounting position 7-1
serial number 9-2
technical data 4-1
type plate 9-1
weight 4-6
DST 10-30

Courtesy of CMA/Flodyne/Hydradyne ▪ Motion Control ▪ Hydraulic ▪ Pneumatic ▪ Electrical ▪ Mechanical ▪ (800) 426-5480 ▪ www.cmafh.com

E

earth-leakage circuit breaker 6-18
ECM01.1-CN01 5-43
ECM01.1-DN01 5-39
ECM01.1-DN02 5-41
ECM01.1-PB01 5-33
EcoDrive Cs
  configuration 1-2
  drive system 1-1
  individual components 1-2
  type codes 1-5
electrical data
  drive controller 4-9
EMC 7-6
encoder
  absolute encoder 8-36
  adapter 10-13
  cable 10-3
  connection 5-12
  data memory 8-34
  emulation cable RKG0008 10-5
  extension cable 10-4
  incremental encoder 8-35
E-Stop 6-19
extension cable
  encoder 10-4
  motor 10-2

F

F248 Low battery voltage 8-44
ferrite 10-9
fiber optic cables 5-32
filter
  mains 6-15
folding ferrite 10-9
front view 5-1
fuse protector Q2 10-26

G

ground
  connection 5-11
ground conditions
  power supply network 6-17
grounded power supply lines 10-30
grounded three-phase current networks 6-17

H

H1 4-16
hazards by improper use 3-2
holding brake
  connection 5-18
  data 8-29
  wear and tear 8-29

I

idle time
  motor 8-6
IKB0041 10-6
IKG0331 10-1
IKG0332 10-2
IKS0230 10-3
IKS0232 10-4
improper use
  hazards 3-2
IN1...IN7 5-13

Courtesy of CMA/Flodyne/Hydradyne ▪ Motion Control ▪ Hydraulic ▪ Pneumatic ▪ Electrical ▪ Mechanical ▪ (800) 426-5480 ▪ www.cmafh.com

IN8...IN11 5-24
inappropriate use 2-2
consequences, discharge of liability 2-1
incremental encoder 8-35
index
drive controller 9-2
motor 9-3
individual components 1-2
inrush current
characteristic 6-5
computing 6-6
reducing 6-6, 10-19
interfaces
pin assignments (overview) 5-2

K

K1 contactor 6-14
key
motor 8-30

L

L1, L2, L3 5-5
line filter 10-26

M

mains
400/480 V 6-16
filter 6-15, 10-38
mains voltage connection 6-1
mains and control voltage
terminal connector 5-5
mains connection
control circuits 6-18
with phase currents of less than 25 A 6-13
with phase currents of more than 25 A 6-12
mains transformer 6-16
mass
drive controller 4-6
master communication card 1-2
master communication module
mounting 5-45
materials
drive controller 4-6
motor housing 8-28
maximum speed 8-8
moisture condensation 7-4
moment of inertia of the rotor 8-8
motor
index 9-3
motor
acceptances 8-39
approvals 8-39
assembly 8-40
basic type 8-1
battery (absolute encoder) 8-44
benefits 8-1
cable 5-10, 10-1
combination with drive controllers 1-4
connection 5-9
encoder data memory 8-34
extension cable 10-2
feedback 8-34
holding brake 8-29
maintenance 8-43
materials 8-28
MSM020B 8-9
MSM030B 8-13

Courtesy of CMA/Flodyne/Hydradyne ▪ Motion Control ▪ Hydraulic ▪ Pneumatic ▪ Electrical ▪ Mechanical ▪ (800) 426-5480 ▪ www.cmafh.com

MSM030C 8-17
MSM040B 8-21
operating modes 8-6
operation 8-43
options 8-1
serial number 9-3
service life 8-33
startup 8-42
technical data 8-6
type code MSM020B 8-2
type code MSM030 8-3
type code MSM040B 8-4
types 8-5
mounting
encoder adapter 10-14
master communication module 5-45
mounting position 7-1
motor 8-27
MSM
type code 8-2
types 8-5
MSM020B
description 8-9
type code 8-2
MSM030
type code 8-3
MSM030B
description 8-13
MSM030C
description 8-17
MSM040B
description 8-21
type code 8-4

N

NFD 10-38
NFE 10-38
NTC thermistor 6-6, 10-19
number of pole pairs 8-7

O

ON time
motor 8-6
operating conditions
drive controllers 4-7
motors 8-25
OUT1 5-13
OUT2...OUT6 5-24
OUT7, OUT8 5-16
overall connection diagram 5-3
overvoltage 6-17

P

peak current
motor 8-7
phase current
on the mains 6-11
pin assignments
overview 5-2
plain shaft 8-30
position detection 8-36
power section
data 4-9
power supply network
ground conditions 6-17
Profibus-DP Interface 5-33
protection

Courtesy of CMA/Flodyne/Hydradyne ▪ Motion Control ▪ Hydraulic ▪ Pneumatic ▪ Electrical ▪ Mechanical ▪ (800) 426-5480 ▪ www.cmafh.com

against contact with electrical parts 3-5
against contact with hot parts 3-10
against dangerous movements 3-7
against electric shock by protective low voltage (PELV) 3-6
against magnetic and electromagnetic fields during operation and mounting 3-9
against pressurized systems 3-11
degree of 4-7
during handling and mounting 3-10

Q

Q1 fuse 6-14

R

rated current
motor 8-7
rated frequency
motor 8-7
rated output
motor 8-7
rated speed
motor 8-7
rated torque
motor 8-7
rated voltage
motor 8-7
RB1, RB2, RB3 5-8
ready to operate Bb 6-18
refresh
battery 8-45
resistor 10-12
reset button 4-16
resistor
for battery refresh 10-12
RKG0008 10-5
RS232
cable 10-6
interface 5-21
RS485 5-22
RxD 5-21

S

S1 4-16
S2 4-16
S3 4-16
safety instructions for electric drives and controls 3-1
SERCOS
data rate 5-32
interface 5-31
transmission power 5-32
serial interface RS232 5-21
serial number
drive controller 9-2
motor 9-3
service life
battery 8-44
setup height
motor 8-25
shaft
load 8-32
plain 8-30
with key 8-30
Signal filtering 5-28
single-phase connection 6-3
SUP-E01-DKC*CS-CONSIG 10-7
SUP-E02-DKC*CS-CONPWR 10-10
SUP-E03-DKC*CS-BATTRY 10-12
SUP-E04-DKC*CS-ENCODR 10-13

Courtesy of CMA/Flodyne/Hydradyne ▪ Motion Control ▪ Hydraulic ▪ Pneumatic ▪ Electrical ▪ Mechanical ▪ (800) 426-5480 ▪ www.cmafh.com

SUP-E05-DKC*CS-SURGEP 6-6, 10-19
SUP-E06-DKC*CS-CONSIG 10-21
supply voltage connection 6-1

T

technical data
  drive controller 4-1
  motor 8-6
terminal connectors
  designations 5-1
tests 4-17
theoretical maximum torque 8-8
thermal time constant
  motor 8-8
thermistor 10-19
thermistor (NTC) 6-6
three-phase connection 6-4
torque constant 8-7
transformer
  mains 6-16
transformers 10-30
TxD 5-21
type code
  basic devices 1-7
  drive controllers with SERCOS interface 1-5, 1-6
  drive controllers without master communication 1-7
  master communication 1-8
  motor 8-2
  motor MSM020B 8-2
  motor MSM030 8-3
  motor MSM040B 8-4
  NTM 10-29
type plate
  drive controller 9-1
  motor 9-3

U

U, V, W 5-9
ungrounded power supply lines 10-30
ungrounded three-phase networks 6-17
use
  directions for use 2-1
  hazards by improper use 3-2

V

vibration (drive controller)
  distortion 4-7
  sinus 4-7
vibration (motor)
  distortion 8-25
  sinus 8-25
views of the devices 5-1
voltage constant
  motor 8-7

W

warning symbols 3-1
weight
  drive controller 4-6
winding inductivity 8-7
winding overtemperature 8-6
winding resistance 8-7

X

X1 5-5

X2 5-6
X3 5-9
X4
drive controller 5-12
encoder adapter 10-17
X5_1 5-13
X5_2 5-15
X5_3 5-18
X5_4 5-24
X6 5-21
X7 5-25
X8
encoder adapter 10-18

Courtesy of CMA/Flodyne/Hydradyne ▪ Motion Control ▪ Hydraulic ▪ Pneumatic ▪ Electrical ▪ Mechanical ▪ (800) 426-5480 ▪ www.cmafh.com

Courtesy of CMA/Flodyne/Hydradyne ▪ Motion Control ▪ Hydraulic ▪ Pneumatic ▪ Electrical ▪ Mechanical ▪ (800) 426-5480 ▪ www.cmafh.com

Courtesy of CMA/Flodyne/Hydradyne ▪ Motion Control ▪ Hydraulic ▪ Pneumatic ▪ Electrical ▪ Mechanical ▪ (800) 426-5480 ▪ www.cmafh.com

Rexroth
Bosch Group

Bosch Rexroth AG
Electric Drives and Controls
P.O. Box 13 57
97803 Lohr, Germany
Bgm.-Dr.-Nebel-Str. 2
97816 Lohr, Germany
Phone +49 (0)93 52-40-50 60
Fax +49 (0)93 52-40-49 41
service.svc@boschrexroth.de
www.boschrexroth.com

R911295758

Printed in Germany
DOK-ECODR3-DKC**.3-CS*-PR02-EN-P